5-2010

Analysis of Variation in Clubfoot Candidate Genes

Audrey R. Ester

Analysis of Variation in Clubfoot Candidate Genes

by

Audrey R. Ester, BS

APPROVED:

Supervisory Professor Jacqueline T. Hecht, PhD

Gilbert Cote, PhD

Hope Northrup, MD

James Hixson, PhD

Karen Storthz, PhD

APPROVED:

Dean, The University of Texas
Health Science Center at Houston
Graduate School of Biomedical Sciences

Analysis of Variation in Clubfoot Candidate Genes

A DISSERTATION

Presented to the Faculty of
The University of Texas
Health Science Center at Houston
and
The University of Texas
M. D. Anderson Cancer Center
Graduate School of Biomedical Sciences
in Partial Fulfillment
of the Requirements
for the Degree of

DOCTOR OF PHILOSOPHY

by

Audrey R. Ester, BS

Houston, Texas
May, 2010

Dedication

I would like to dedicate this work to my parents who have always had faith in me and supported me throughout my graduate career.

Acknowledgements

First and foremost I must thank Dr. Hecht for her guidance and mentorship. She spent many, many hours editing my writing, making suggestions to my experiments, and finding me help when I needed it. She has a better student and a better scientist. Dr. Gil Cote also provided much needed advice for both scientific and personal adversities. His dedication to our program and to HMG students has been a huge support system, and is greatly appreciated.

I would like to thank my family for always supporting me in my endeavors, being a shoulder to cry on, and providing a voice of encouragement. Thank you so much for everything you have done for me.

My friends provided the needed distraction and advice during graduate school, and I would not have survived without you. My labmates, Brett, Katelyn, and Tom kept me sane during my work, laughed at my mistakes, and then helped me to fix them. Katelyn, feel free to call with any problems, and please no conference calls with singing… Many thanks to Kim, with whom "Audrey and Kim Night" was developed, and I am ever so grateful that we did not live up to your mother's prediction of "Audrey and Kim do jail"!

I must also thank fellow lab members who have always been willing to help me with my lab work, go on coffee runs, and make suggestions on presentations and publications. Specifically, I would like to thank Dr. Karen Posey, who received almost daily questions about protocols I was unfamiliar with and the following discussions when I did not know how to interpret the results. Finally I must thank all of the GSBS staff who has helped me in my career as a graduate student. Thank you for the advice and hard work.

Analysis of Variation in Clubfoot Candidate Genes

Audrey Ester

Advisor: Jacqueline T. Hecht, PhD

Isolated clubfoot, a common birth defect occurring in more than 135,000 livebirths worldwide each year, is associated with significant health care and financial burdens. Clubfoot is defined by forefoot adduction, hindfoot varus, midfoot cavus and hindfoot equinus. Isolated clubfoot, which is the focus of these studies, is distinct from syndromic clubfoot because there are no other associated malformations. Population, family, twin and segregation analysis studies provide evidence that genetic and environmental factors play an etiologic role in isolated clubfoot. *The studies described in this thesis were performed to define the role of genetic variation in isolated clubfoot.* Interrogation of a deletion region associated with syndromic clubfoot, suggested that *CASP8* and *CASP10*, two apoptotic genes, play a role in isolated clubfoot. To explore the role of apoptotic genes in clubfoot, SNPs spanning genes involved in the apoptotic pathway in the six chromosomal deletion regions, and limb patterning genes, *HOXD* and *HOXA*, were interrogated. SNPs in mitochondrial mediated apoptotic genes and several SNPs in *HOXA* and *HOXD* genes were modestly associated with clubfoot with the most significant SNP, rs3801776, located in the basal promoter of *HOXA9*. Several significant associations were found with SNPs in *NFAT2* and *TNIP2*. Significant gene interactions were detected between SNPs in *HOX* and apoptotic genes. These findings suggest a model for clubfoot in which variation in one gene is not sufficient to cause the malformation but requires variation several genes to perturb protein expression sufficiently to alter muscle and foot development. **These results significantly impact our knowledge base by delineating underlying mechanisms causing clubfoot.**

Table of Content

Chapter 1: Background

Introduction to Clubfoot

Foot deformities are common. One group results from flexible positional abnormalities and are easily treated with minor manipulations and is likely due to intrauterine constraint[1]. The second group is rigid malformations referred to as talipes equinovarus, and is the only true clubfoot. This malformation involves the foot held in equinus (rigid downward position) and adducted (turned towards the midline of the body)[2]. Clubfeet often have misshapen bones such as a flattened talus, the navicular is often vertical instead of horizontal, and cuneiforms are often stacked behind each other[2]. The position of the clubfoot resembles an embryonic foot at the beginning of the second month, although during no stage of normal development is the navicular vertical[2]. While the bones may be misshaped and aligned differently in clubfoot, it is unknown if this is the primary cause of clubfoot, or if it is secondary to abnormal musculature or tendon placement.

Musculature and tendons of clubfeet

Clubfeet are also characterized by hypoplasia of the calf muscles, which often persists throughout life; however there are conflicting studies about muscle placement, fiber density, and even muscle size[3]. Irani and Sherman examined eleven fetal clubfeet from 22 to 36 gestational weeks of age[3]. In one case, the cross-section of the calf muscle from the affected limb was larger than the unaffected limb, but the muscles appeared to be the same size bilaterally even though the limb appeared larger[3]. However, another affected foot showed muscle masses that corresponded to the unaffected foot, but each mass was much smaller than that of the control limb[3]. In general, Irani and Sherman concluded that muscles of clubfeet are underdeveloped and smaller when compared to unaffected limbs[3]. Because the

calf muscles have found to be hypoplastic, they have been the focus of several histological studies in clubfeet.

In 1977, Isaacs et al. investigated the types, number, size, and direction of muscle fibers in individuals with clubfeet. This study concluded that clubfoot calf muscles are "grossly abnormal", with higher numbers of Type I fibers, and both types of muscle fibers were larger than controls[4]. Type I muscle fibers are also known as slow twitch muscle fibers and are redder in color because they have a higher myoglobin and oxygen content[5,6]. These fibers are used in long-term activity because they resist fatigue, as opposed to fast twitch (Type II) muscle fibers, which are used during short bursts of activities, are more fatigable and can only receive energy from glycolysis[5,6]. In addition to higher numbers of Type I muscle fibers, Isaacs et al. found evidence of denervation in calf muscles of clubfoot[4]. The larger muscle fibers imply that atrophy is not the reason for smaller muscles, but might be caused by a neuropathy[4]. The patients in this study were referred for study due to the presence of a rigid talipes equinovarus, but does not mention any other associated abnormalities[4].

Fukuhara et al. performed histomorphometric and immunohistochemical studies on 16 fetal clubfeet and 27 normal feet (seven normal feet from unilateral patients and 20 feet from spontaneously aborted fetuses of the same age range as those affected)[7]. This study found that the bone malformations were secondary to ligament and collagen changes[7]. The tibialis posterior ligament was found to be enlarged, and the orientation of the collagen fibers was disrupted[7]. A syndromic clubfoot animal model was created in the 1960s by Drachman et al. through the paralysis of chick embryos[8]. These animals exhibit "jaw deformities, scoliosis, characteristic flexion contractures of the knee, ankle, and toe joints, with severe deformity of the articulating surfaces"[8]. Germiller et al. used this model to determine the muscle and

tendon sizes in this model compared to control chicks[8]. The total volume of muscles and soft tissue of the paralyzed chicks decreased as the dose of paralyzing drug increased[8]. In addition the tendons were significantly smaller with increasing paralysis and merged at the bottom of the calf[8]. This is in contrast to the size of the cross-sectional area of the tibial muscle, which was not correlated with the drug dose[8]. This suggests that in the drug-induced clubfoot model, muscle and tendon cross-sectional area were smaller than those of controls[8]. This supports data from previous studies that suggest that calf muscles in nonsyndromic clubfeet are abnormally small.

In 1998, a prospective study was performed by Loren et al. in which muscles of children with clubfoot were examined histologically, and further investigated if surgical intervention impacted these histopathological findings[1]. About half of the patients with clubfeet showed abnormal muscle morphology[1]. Twenty percent had fiber type disproportion, and 30% had fiber size variation (>3:1 ratio)[1]. The clubfeet with abnormal muscle morphologies had an increased risk for clubfoot recurrence and a second operation (5.6 fold increase)[1].

Omeroglu et al. studied ten fetuses with clubfoot who also had spina bifida[9]. Spina bifida is often associated with deformities of the foot and ankle, which usually result from muscle imbalance or denervation. Of these foot deformities, clubfoot is the most common in spina bifida patients with "L3 and higher neurosegmental lesions"[9]. The muscle size of the control group was larger than that of the affected limbs, and there was a higher proportion of fibrosis in clubfoot limbs than those of control muscles[9]. This study concluded that the fibrosis was secondary to atrophy in the skeletal muscle tissue, and the clubfoot is most the result of muscle inactivity[9]. This is possibly due to the atrophy or the atrophy may occur because of the lack of muscle movement[9].

A histological study of clubfoot in 2006 reported on 431 muscle specimens obtained from 68 patient surgeries. This study gave very different results with 86.3% having "no discernible pathology"[10]. Atrophy and an over-abundance of type I muscle fibers was found in 12.8% of the specimens[10]. This study was much larger than the Omeroglu study and was a better representation of the average clubfoot compared to normal musculature. Other case studies have reported an additional muscle coming out of the soleus muscle.[11-13] There have also been reports of a flexor digitorum accessorius longus muscle that is aberrant in children with clubfoot[14-16]. These case studies involve small numbers of clubfeet and from individual collection sites. In addition, many of these evaluated the "clubfoot deformity" but do not discriminate between idiopathic clubfoot and syndromic clubfoot, and so these clubfeet might have different musculature due to syndromes (such as a neuropathy). A large-scale comprehensive study in idiopathic clubfoot patients is needed to validate these findings.

Treatment of clubfoot

There are several methods of clubfoot treatment, including aggressive operative intervention, conservative manipulations of the feet, and a combination of the two methods[17]. Historically, operative treatments were the first choice among doctors, often performing a comprehensive treatment that uses surgery to correct all aspects of the deformity. However, a more conservative approach has been taken consisting of manipulation, casting, and bracing of the foot, followed by surgery if necessary[17].

Conservative Treatment

The two most common conservative treatments are the Ponseti and Montpellier (French) methods, which both promote the progressive stretching of the muscles and tendons in an

attempt to forgo surgical soft tissue release[18]. The Ponseti method consists or serial castings that hold the foot in an overcorrected position, a tendonectomy if needed, and then braces that again hold the foot in an overcorrected position[18]. The Montpellier method requires much more intensive participation on the part of the physician and requires the patient to have long inpatient manipulations and "continuous passive motion"[18]. The Montpellier method is more expensive and not widely used outside of France[18].

Operative Treatment

Operative treatments consist of individual surgeries to address each component of the clubfoot deformity, or can repair multiple components or the entire deformity. Many doctors who prefer to use an operative treatment accept that the end result is not a normal foot[17]. Posterior release is the most common surgery after conservative treatment, although more aggressive surgery may be necessary. This soft tissue release consists of releasing the Achilles tendon, as well as tendons restraining the ankle and subtalar joints[18]. If the clubfoot deformity is more extensive, it may require medial and lateral tendon releases as well[18].

Complications of Treatment

The Ponseti method has a high rate of correction, but almost always requires an Achilles tenotomy[18]. Usually the only complications of the Ponseti method are related to slippage of the casts or failure to comply with bracing[18]. Undercorrection following surgery can be difficult because the scar tissue is less flexible and hinders further surgeries[18]. Overcorrection is harder to treat, and can even cause a "rocker bottom" foot[18]. The most common complication for all methods of treatment is recurrence of the clubfoot[18]. The Ponseti method treats recurrent clubfeet by recasting or rebracing until the deformity is

corrected and possible surgery if necessary[18]. Recurrence can also occur because of scar tissue following surgery preventing the stretching of muscles and tendons during bracing[18]. The Ilizarov technique is used almost exclusively for recurrent clubfeet, although long term success has not been reported[17]. The Ilizarov method uses an external, circular frame, and this method is often supplemented with other types of surgery as well.

Treatment Innovations

Botulinum toxin-A (Botox) has been used as a substitute for an Achilles tenotomy[17]. The results of one study are a disappointment as the injected infants showed no difference than those injected with a placebo with regard to further treatment[17]. However, additional studies have shown that Botox is an effective treatment and reduces the need for tendon releases[19,20]. Surgery is still required in few cases, but Botox can still be used as a conservative treatment before resorting to tendon release[20].

In order to improve treatments for children with clubfoot, the extent of the tissues affected and the cause of the deformity need to be determined. In addition, correct classification and identification of the causes of clubfoot are needed.

Normal foot development

Limb formation is a complex process involving cell proliferation, patterning, and programmed cell death[21,22]. The hind limb begins to develop as a small swelling during the fourth week of gestation, with morphogenesis being completed by the end of the eighth week[23]. The legs, which develop in the midline in equinus should move to plantar grade by the twelfth week[24]. Perturbations in any of the developmental processes may affect the final positioning, particularly those causing hypoplastic muscles or shortened tendons that are

universally associated with clubfoot[1,7,11,14]. The hind limbs are composed of three basic segments: the stylopod (upper limb), the zeugopod (lower limb), and the autopod (foot). The expansion and differentiation of cells in the limb bud is regulated by many secreted signaling factors.

Signaling factors of normal foot development

Limb development involves both dorsal ventral patterning and proximal distal outgrowth, which requires an intricate expression and diffusion pattern of growth factor signaling[25]. There are three major signaling centers that control these axes of development, the AER, the zone of polarizing activity (ZPA), and the ectoderm[26]. The AER maintains the proximal distal outgrowth, the ZPA migrates behind the AER regulating the anterior-posterior axis, and the ectoderm controls the dorsal-ventral axis[26].

The emerging limb bud forms with the leading most edge of the outgrowth, known as the apical ectodermal ridge (AER)[26]. The AER maintains proliferating cells and secretes factors that prevent cells from differentiating into cartilage[25]. The AER is characterized by both proliferating cells and cells undergoing programmed cell death, and these have been shown to be in the same regions[26]. One model theorizes that the longer cells remain in the AER, the more distal the cells are located when they differentiate[27]. Another theory suggests that the fate of cells comprising the limb is predetermined and therefore time does not dictate the differentiation of cells[27]. Outside of the AER, somites begins to proliferate and differentiate into muscle precursors[26].

These signaling centers secrete growth factors and other signals that diffuse through the limb bud, interacting and forming overlapping and diverging gradients[26]. These signaling

regions are conserved throughout vertebrate development including fish[28]. This interplay of secreted signaling factors is what leads to the distinct and normal limb[26].

FGF signaling

Limb development first begins with the expression of fibroblast growth factor (*FGF*) 8, which is expressed by the intermediate mesoderm in the trunk of the embryo[27]. This first wave of FGF8 induces expression of *WNT-2B* and *-8C*, which in turn stimulates expression of *FGF10*[27]. FGF10 signals a second wave of FGF8 expression in the AER[27], and in turn maintains expression of *FGF10*[27]. The AER is controlled primarily by *FGFs*, including FGF2, 8, 9 and FGF receptor (FGFR) 2b, which are expressed constitutively throughout the AER, and *FGF4* and *17* are expressed in the posterior AER[27]. Because of the expression pattern of *FGF4* and *17*, it is thought that these growth factors stimulate and maintain the ZPA[27].

Sonic Hedgehog and *GLI3* signaling

Sonic hedgehog (*SHH*) is a secreted signaling molecule that is interpreted through another molecule, GLI3[29]. In limb development, SHH regulates the distribution of *GLI3*, and GLI3 is in turn regulated by SHH through processing[29]. *SHH* expression is restricted to the ZPA, and is thought to act as a morphogen by regulation other signaling factors depending on its concentration in specific tissues and regions[29]. However, a double knockout of *SHH* and *GLI3* showed a restoration of ventral cell types that were missing in *SHH*-/- mice, indicating that the extent of their functions is unknown[29].

Within the ZPA, *SHH* is responsible for the pattering of the digits[29]. Ectopic expression of *SHH* causes polydactyly[29]. However knockout of *GLI3* can produce synpolydactyly,

which suggests that *GLI3* may be involved in apoptosis and separation of digits[29]. However, the knockouts of *SHH* or *GLI3* do not affect the distal portions of the limb, suggesting that the ZPA is involved only in the initial development of the autopod[29].

SHH also stimulates the expression of other genes involved in limb development including *HOXD* genes[30]. *SHH* is a homolog of hedgehog (*HH*) in drosophila, and it has been shown to regulate gene expression of members of the bone morphogenic protein (*BMP*) family, which can stimulate apoptosis[30].

Homeobox (*HOX*) Genes

The *HOX* genes are transcription factors which regulate differentiation and patterning of cells[31,32]. In vertebrates there are 39 *HOX* genes in four clusters, and each cluster is on a separate chromosome. The *HOX* clusters are regulated temporally and spatially by global promoters, noncoding RNAs, transcription factors, and other regulatory elements during embryogenesis[31,33]. 5' genes of the *HOXA* and *HOXD* clusters (9-13) are expressed in the mesoderm and muscles of the developing limbs[34]. The 5' genes are expressed later and more distally with *HOXA13* and *HOXD13* being expressed latest and in the distal autopod[35]. *HOX* mutations lead abnormal limb development, and each of the 5' genes correlates with a missing limb segment[35]. A deletion of *HOXA11* and *HOXD11* results in elimination of the zeugopod, but the deletion of *HOXA13* and *HOXD13* causes absence of the autopod[35].

Retinoic Acid

Retinoic acid (RA) is derived from vitamin A, which is necessary for normal embryo development[28]. RA acts as a transcription factor binding to retinoic acid response elements (RAREs) that either activate or repress genes[28]. High levels of retinoic acid can lead to birth

defects, but a deficiency of retinoic acid can prevent normal embryonic development[28]. RA is postulated to be a morphogen, a molecule to which cells respond differently depending on its concentration[28]. RA can stimulate SHH production and can also mimic a ZPA graft, leading to digit duplications[30]. While the implantation of a RA bead in the limb causes polydactyly, there is no evidence that it plays a direct role in normal limb development[28]. However, RA expression is required in the trunk of the embryo where the limb buds will form[36]. This early expression is needed even though other factors will be expressed in the region such as SHH which also confer limb bud placement[36]. Retinoic acid deficiency can lead to a wide array of malformations including cleft palate, unfused nasal passages, and syndactyly[36]. These malformations reported result from a lack of apoptosis, suggesting that RA can induce/regulate apoptosis during embryonic development[36].

Apoptosis

Apoptosis or programmed cell death (PCD) is the process that a cell undergoes when it receives signal(s) indicating that the cell is no longer needed[37]. Typically this is associated with the shaping of the limb including digits and other skeletal elements[37]. Apoptosis occurs in many different regions of the developing limb, although some major regions of apoptosis have been named necrotic regions because their naming occurred before the discovery of PCD[37]. A large region of apoptosis in the mesenchyme is known as the opaque patch, which regulates PCD in the skeleton of the zeugopod[37]. Failure of apoptosis to occur in the opaque patch leads to fusion of the tibia and fibula[37].

There is also apoptosis in the interdigital mesoderm which results in the formation of separate fingers, and its absence can lead to a fusion of the fingers[37]. During the outgrowth of the limb bud, apoptosis occurs in the AER, and if that apoptosis is inhibited, the AER

overgrows and results in polydactyly[37]. Studies have also shown a role for apoptosis in joint formation and possibly guiding nerves through the developing limb[22]. In addition to these large regions of apoptosis, there is also PCD within the developing muscles and tendons[22].

Muscle and Tendon Development

Muscles cells originate from the somatic mesoderm, produced through signaling factors *PAX3* and *MYOD*, and then migrate to the appropriate location under control of Homeobox gene, *LBX1*[22]. These muscles migrate to regions that correspond to the major delineation of the limb (stylopod, zeugopod, and autopod)[22]. These regions further separate into the cell clusters that will become the individual muscles of each joint region[22]. The formation of these muscle cell clusters requires rapid replication, and cell are often produced in surplus, requiring regulation through PCD[22]. These large areas of muscle mass are termed muscle bellies, which is the bulge in the middle of the muscle between the regions that attach to tendons[22].

In addition, muscles require attachment to tendons to inhibit loss of muscle mass and increased apoptosis[22]. Muscles show an increase in apoptosis when a tendon is severed through surgery[22]. This suggests that tendon lengthening during treatment of clubfoot may contribute to muscle wasting and atrophy of the calf muscles. The connective tissues of the tendons develop first, regulated by β-catenin and *WNT* signaling, and provide a scaffold where the muscle cells migrate[22].

The apoptosis that regulates muscle cell growth is dependent on RA signaling, and inhibition of RA causes a disorganization of the tendon tissues[22]. The retinoic acid receptor

(*RARβ*) and *CYP26A1* are expressed in the tissues that undergo apoptosis and expression is inversely proportional to the amount of retinoic acid in the tissues[22].

Causes of Clubfoot

Clubfoot is a common birth defect although the birth prevalence varies from a low of 1/2500 in African Americans to a high of 1/150 in Polynesians, with a worldwide average rate of approximately 1/1000[38-41]. Half of all cases have unilateral involvement, and of those the right side is affected more frequently than the left[38]. Males are affected twice as often as females[42]. Segregation analyses suggest that clubfoot is likely caused by a single gene with reduced penetrance or several other genes with minor effects and environmental influences[42-46]. Because males are affected more frequently than males, it is hypothesized that clubfoot follows the Carter (multifactorial) effect, in which females require more susceptibility loci than males[47]. This is supported by family studies that show male children of affected mothers have the highest affection rates, and females of affected fathers have the lowest affection rates[47]. In addition to genetic contribution to the clubfoot model, several environmental factors have been suggested to play a role in clubfoot development[48-51].

Intrauterine constraint has been suggested as an environmental etiologic factor, but no conclusive data supports this theory.[52] Seasonal variation has also been suggested to contribute to clubfoot but this has not been supported[53-56]. Maternal smoking is associated with clubfoot and increases the odds of having a child with clubfoot (OR 1.3-2.2)[57-59]. In addition, a family history of clubfoot in a woman who smokes while pregnant increases her risk of having a child with clubfoot by twenty fold[58]. Maternal smoking is not only strongly associated with clubfoot, but it is the only environmental factor shown to contribute to clubfoot with results that are readily reproducible[52-59].

Evidence supporting a genetic etiology underlying clubfoot comes from (1) aggregation of clubfoot in families, (2) twin studies and (3) segregation analyses. Clubfoot can be found throughout multiple generations in families, which suggests a that clubfoot is in part genetic[60]. A Danish twin study analyzed 52 twin pairs and found that 17% of monozygotic twins were concordant compared to only 5% of dizygotic twins, suggesting genetics plays a role in clubfoot[61]. A second twin study found that monozygotic twins had a higher concordance of 32.5% than that of dizygotic twins (2.9%)[62,63]. The twin studies vary in percentages due to differences in populations studied, but that is to be expected due to differences in clubfoot etiology between ethnicities and populations. These twin studies suggest genetic liability for clubfoot because monozygotic twins share more genes than dizygotic twins.

Several segregation analyses have been performed with many different conclusions for the populations studied including, a dominant gene, a recessive gene, incomplete penetrance, X-linked, and polygenic inheritance[43,44,63-65]. One segregation analysis concluded that clubfoot is caused by a major gene that is affected by modifier genes and environmental factors for Caucasians[44]. A study by Palmer supports this finding[66]. However, another study that assessed Hawaiians, Caucasians and Asians found a major gene affect with multifactorial contribution for Hawaiians and Caucasians while no major gene was involved in the Asian etiology[43]. The segregation analysis on nonHispanic whites and US born Hispanics found similar rates of occurrence under a recessive model with reduced penetrance[67]. Altogether these segregation analyses demonstrate different modes of inheritance for different populations, and most likely there will be an interaction of several genes and environmental factors. These studies clearly suggest a genetic etiology, and

genetic studies are needed to understand the development of clubfoot and improve genetic counseling and risk determination.

Genetic Mapping

Genetic mapping identifies loci that are either linked or associated with a disease or disease susceptibility, and there are several different methods for genetic mapping[68]. Linkage mapping uses the number of meiotic crossover events that take place to identify chromosome regions that harbor susceptibility genes, measured in linkage disequilibrium (LD)[68]. Linkage disequilibrium occurs when two loci are passed together during meiosis more often than by chance due to lack of meiotic crossover between the two loci[68]. Because these events are traced through meiotic events, linkage studies can only be performed in families and large pedigrees with many affected individuals[68]. The best markers to identify linkage are microsatellite polymorphisms, which are short repeats that have varying numbers of repeats in different alleles[68]. These markers are highly polymorphic and provide the most information for linkage analyses[68]. In addition, multipoint analysis can be used to extrapolate information between markers.

Association studies are closely related to linkage studies and are based on populations being derived from founders, and limited meiotic crossovers produce inherited haplotypes over many generations[68]. Association studies work well with case control studies, however association tests can also be performed in samples composed of families and trios[68]. Association studies typically use single nucleotide polymorphisms (SNPs) as markers because they are bi-allelic and are available in high-throughput formats. SNPs are much

more common than microsatellite markers and therefore can be used for fine mapping because several markers within a gene can be selected[68].

Genome-wide genotyping methods are expensive, and so several methods can be used to retain power of the study and reduce the cost[68]. Tagged SNPs represent a particular haplotype, and genotype information for the other SNPs in that haplotype can be inferred from the genotype of the tagged SNP[68]. In addition, regions of the genome can be targeted through analysis of candidate genes. These may be genes that are in linked regions that need to be fine mapped, genes involved in processes that may lead to the disease if perturbed, or genes that cause a syndrome that has the disease phenotype. These mapping techniques can be used to identify variation that contributes to the disease process.

Previous Genetic Studies

One of the first studies to narrow the search for genetic variation leading to clubfoot was performed by Brewer et al[69]. This study included children who had a variety of syndromes caused by large chromosomal deletion regions. The children were then grouped by phenotypic features, such as clubfoot and then the chromosomal deletion regions were compared[69]. Even though the affected individuals have different syndromes, the overlapping deletion regions between individuals with a shared trait might contain genes that contribute to the idiopathic condition[69]. The study found six large chromosomal deletion regions shared among individuals with syndromic clubfoot: 2q31-33, 3q23-24, 4p16-14, 7p22, 13q33-34 and 18q22-23[69]. Brewer performed a follow up to this study by performing a similar analysis of children with large duplication regions, which found two more regions associated with clubfoot: 6q21–27, 10p15–11[70].

There have been few genetic mapping studies of idiopathic clubfoot. Deitz et al. performed a segregation analysis on a clubfoot family with four generations available for genotyping, with 13 affected individuals and 41 unaffected individuals[71]. This study found two chromosomal regions of interest with LOD scores above 2.0. The authors identified two possible candidate genes, *WNT7A* and *LMX*-1, although further study was needed to assess variations in these genes[71]. Shyy et al. followed up this study with the sequencing of two genes in these candidate regions, *WNT7A* and *CAND2*[72]. The sequencing of exons and promoters identified a variant in each gene, although the variants occurred in equal numbers of cases and controls[72]. The authors concluded that these two genes did not contribute to idiopathic clubfoot.

Because smoking has been strongly associated with clubfoot, genes involved in toxin metabolism, if perturbed, could increase susceptibility to clubfoot. N-acetyltransferase (*NAT2*) acetylates toxins including free radicals found in cigarette smoke, and slow acetylation of these molecules can lead to the formation of adducts, which can impair normal development[73,74]. Specific SNPs within *NAT2* have been shown to lead to slower acetylation of target molecules. Five variants in *NAT2* were genotyped in our clubfoot population, and one of these sites had fewer than expected normal homozygotes in the affected individuals[75]. Additionally, in a small case-control study, there were more slow acetylators than expected in the cases, suggesting that slow acetylators may have a higher risk for clubfoot[75].

Distal arthrogryposis is a contracture syndrome that includes clubfoot in the phenotype as well as contractures of the hand, which has been shown to be cause by mutations in several different genes involved in the muscle contracture complex[76]. Gurnett et al. conducted a small study, interrogating *MYH3*, *TNNT3*, and *TPM2* (muscle contraction genes) for

association with clubfoot[76]. All exons and 5' and 3' regions were sequenced in 20 idiopathic clubfoot patients[76]. Rare variants were found, but did not segregate with the disease and therefore are not thought to contribute to clubfoot[76].

A linkage analysis was performed on a five generation family stated to have idiopathic clubfoot, although the proband had bilateral polydactyly and missing the tibia of his right leg and other individuals had bilateral hypoplastic patella[77]. This implies that the family does not have idiopathic clubfoot. The linkage analysis yielded a LOD score of 3.31 on chromosome 5, and *PITX1* was a candidate gene found in the linkage region[77]. PITX1 is a transcription factor that is required for hindlimb expression, and loss of its expression causes mouse hindlimbs to resemble forelimbs[77]. *PITX1* also has higher expression in the right side of the body, and contributes to differences in development between the two sides such as the ventricles of the heart[77]. A mutation in *PITX1* was found in five affected family members but not in 500 normal controls. The researchers concluded that the findings suggest *PITX1* or the pathway it is involved in plays a role in idiopathic clubfoot, although the family did not have idiopathic clubfoot[77]. They further concluded that *PITX1* might contribute to the right foot being affected more often in unilateral clubfoot due to the higher expression levels in the right limb[77].

The Hecht lab began systematically analyzing the regions identified by Brewer et al. and interrogating them for genes associated with isolated clubfoot[69,78]. Beginning with the 2q31-33 region, nine short tandem repeat (STR) markers were selected spanning the region and tested for association in our clubfoot population consisting of nonHispanic white and Hispanic families with or without history of clubfoot[78]. Two STRs segregated with affected individuals, and three genes (Caspase 8, Caspase 10, and *CFLAR*) were located near one of

the STRs. SNPs were selected in these genes and tested for association in the same clubfoot population because these genes are involved in the apoptotic pathway and participate in limb development[78]. One SNP from Caspase *(CASP) 10* had an altered transmission in the clubfoot population (p=0.002)[78].

Several labs have used retinoic acid, a known teratogen, to induce syndromic clubfoot-like deformities in mice and rats[79-81]. Only one study evaluated protein levels in the exposed offspring who had facial clefts and neural tube defects [79]. Several proteins were down regulated including X-linked inhibitor of apoptosis protein (*XIAP*), troponin T1 (*TNNT1*) and collagen type 2 (*COL2α1*)[79]. Increased apoptosis was also observed in these rats[79]. This study suggests that these genes might be involved in clubfoot, but have not yet been evaluated.

Significance

Clubfoot is a common birth defect that affects about 130,000 newborns throughout the world every year. Treatment modalities such as casting and surgery have improved the long term outcome but residual foot and leg abnormalities often persist[42,82,83]. Little is known the etiology of clubfoot. Genes are known to play a role in clubfoot, but the challenge is to identify these. If the genetic pathways contributing to clubfoot can be determined, then preconceptual treatments may be developed, or a new method of diagnosis may be developed. *The goal of this project is to define genes that contribute to clubfoot.* In addition, the identification of high risk haplotypes could improve genetic counseling. **This work is significant because it aims to determine the underlying mechanism causing a common birth defect that involves abnormal limb development.**

Brewer et al. identified six large deletion regions that overlapped in individuals with syndromic clubfoot and hypothesized that these regions may contain genes that contribute to

idiopathic clubfoot[69]. Each of the six regions contained genes which are involved in the apoptotic pathway as well as genes that interact with the apoptotic pathway (www.stanford.source.edu). To determine whether variation in these genes plays a role in clubfoot, the SNPs within these apoptotic genes were genotyped and tested for association or linkage to clubfoot. These results are discussed in Chapters 3 and 4.

The 2q31-33 syndromic deletion region from the Brewer study contains the *HOXD* gene cluster which directs axial and limb patterning during development (www.genome.ucsc.edu)[31,33]. *HOXA* is located on chromosome 7p15-14 and has a redundant function with *HOXD*[33]. Mutations in *HOXA* and *HOXD* genes have been associated with six syndromes that involve limb abnormalities, which include synpolydactyly and brachydactyly (http://www.ncbi.nlm.nih.gov/sites/entrez?db=omim). The association of *HOX* mutations with limb anomalies led us to interrogate the *HOXA* and *HOXD* gene clusters in our clubfoot samples. The results of these studies are found in Chapter 5.

Chapter 2: Materials and Methods

Study Population

Probands with clubfoot were identified through Shriners Hospitals for Children of Houston and Los Angeles and the Scottish Rite Hospital of Dallas and are designated as the "discovery population". Affected individuals were diagnosed with clubfoot through clinical and radiographic diagnosis. Individuals with chromosomal abnormalities, syndromes or postnatal events associated with clubfoot were excluded. Ethnicity was self-reported and informed consent was obtained. Two generation pedigrees were obtained for all probands, and these pedigrees were classified into those with affected relatives (multiplex family history) or those without affected relatives (simplex trios). Pedigrees were extended for multiplex families to include all individuals affected.

A validation clubfoot population of 144 nonHispanic white trios was obtained from Washington University to test positive results found in the discovery population. For the *HoxD10* M319K mutation analysis, two positive controls with congenital vertical talus (CVT) with this mutation were obtained from Dr. Dobbs at Washington University. 595 unrelated, unaffected negative controls were ascertained through the cleft lip and palate clinics at Children's Hospital, Boston, Texas Children's Hospital, Houston, and the University of Texas Craniofacial Clinic, Houston.

Samples

DNA was extracted from blood or saliva samples collected from participating individuals. DNA was extracted from blood using the DNA Isolation Kit for Mammalian Blood (Roche, Palo Alto, CA) or saliva with Oragene Purifier (DNA Genotek Inc., Ottawa, Ontario, Canada). Each of these kits was used according to the manufacturer's instructions.

DNA samples were quantified using the Nanodrop spectrophotometer (Thermo Fisher Scientific, Waltham, MA) and checked for degradation by running on a 2% agarose gel. DNA was then stored at -20°C.

Gene Selection

Brewer et al. studied children with large deletion regions clubfoot to try and narrow down genomic regions associated with idiopathic clubfoot[69]. They aligned chromosomal deletion regions in these children and identified the smallest overlapping regions[69]. These regions might contain genes that contribute to idiopathic clubfoot. Candidate genes within these regions, including HOX and apoptotic genes, were interrogated for association with clubfoot. These studies are described in Chapters 3, 4 and 5.

Genotyping

Genotyping was performed using single nucleotide polymorphisms (SNPs) as genetic markers. SNPs were selected using the National Center for BioInformatics (NCBI, http://www.ncbi.nlm.nih.gov) and Ensembl (http://www.ensembl.org) websites. SNPs selected were based on heterozygosity (>0.3), placement in gene, tagging ability and coverage of gene. Software programs Haploview[84] and SNPBrowser were also used for SNP selection. Genotyping was performed using TaqMan® SNP Genotyping Assays and SNPlex™ Genotyping System (Applied Biosystems, Foster City, CA). TaqMan® results were analyzed on the 7900HT using SDS 2.1 (Applied Biosystems, Foster City, CA). SNPlex™ results were analyzed on a 3730 using GeneMapper® 4.0 (Applied Biosystems, Foster City, CA). Both TaqMan® and SNPlex™ reactions were performed according to standard protocols. The *HoxD10* M319K mutation was detected using a custom TaqMan®

assay. The primers were designed using File Builder 3.0 (Applied Biosystems, Foster City, CA).

Statistical Analyses

The data was originally analyzed as a whole and then probands were stratified by ethnicity alone and ethnicity and family history. Allele frequencies and Hardy-Weinberg Equilibrium (HWE) were calculated using SAS (v9.1). Pairwise linkage disequilibrium values (D′ and r^2) were calculated using GOLD[85].

Different methods for assessing linkage and/or association were performed in order to obtain the greatest amount of information from this dataset. Parametric and non-parametric linkage analyses were conducted using Merlin[86]. Graphical Overview of Linkage Disequilibrium (GOLD) was used to calculate the disequilibrium coefficient (D′) between pairs of SNPs[87]. The pedigree disequilibrium test (PDT) and the family based association test (FBAT) were used to determine association in clubfoot families[88,89]. The PDT tests for altered transmission of alleles within pedigrees. The Geno-PDT is a function within the PDT, and tests specific genotypes is more accurate when looking at dominant and recessive models[75]. Family based associated test (FBAT) was used to test for association and the HBAT function within FBAT was used to test haplotypes[90]. HBAT and FBAT were run under a recessive model.

Association in the Presence of Linkage (APL) was used because the program incorporates data even when a parental genotype is missing[91]. Altered transmission of pairwise haplotypes within a gene was analyzed using APL. Positive associated SNPs ($p<0.05$) were then analyzed for gene-gene interaction using Generalized Estimating Equations (GEE)[92]

Sequencing

The region surrounding mir196-b was amplified using polymerase chain reaction (PCR) with primers: Fwd- 5'-GCTCGCTGGGCTGCAAGATTTGG-3' and Rvs- 5'-CTGCGGAGAAAGACACGAGGCTC-3'. The PCR was performed using the following program: 94°C for 2:00 [98°C for 0:10, 55°C ± 1°C for 0:30, 72°C for 1:00] for 35 cycles and 72°C for 10:00. Five percent DMSO was added to the reaction because of the high G-C content of the DNA. The 552bp product was sequenced by Lone Star Labs, Inc. (Houston, TX). Sequence was analyzed using Sequencher (Gene Codes, Ann Arbor, Michigan).

Transcription Factor Binding Prediction

Both the (-2) miR196-b and SNP16 variants are in potential promoter regions and could affect putative binding sites. Three *in silico* prediction programs, Alibaba2, Patch and Transcription Element Search Software (TESS), were used to assess whether ancestral or alternate sequences changed or generated a transcription factor binding site[93-95]. The ancestral allele is defined by NCBI as the allele that is found in chimpanzee and is thought to be shared by the common ancestor (http://www.ncbi.nlm.nih.gov.ezproxyhost.library.tmc.edu/bookshelf/br.fcgi?book=helpsnpfaq&part=Content#Content.Ancestral_Allele_Dat). The *in silico* testing provides theoretical data which needs to be confirmed with functional testing.

Chapter 3: Mitochondrial Mediated Apoptotic Pathway and Clubfoot

This chapter is a presentation of work from a previously published paper. For more information please refer to: Ester, AR, et al. Apoptotic gene analysis in idiopathic talipes equinovarus (clubfoot). Current Orthopedic Related Research. 2007 Sep; 462: 32-7.

Background of Apoptosis and clubfoot

Deletion Regions Associated with Clubfoot

Cytogenetic deletion mapping has been used in mapping many diseases, although a comprehensive study of these deletions had not been performed in birth defects. Therefore, Brewer et al. decided to study children with different birth defects caused by chromosome deletions[69]. The study consisted of 1,753 children with 47 different phenotypes, although some children had multiple malformations[69]. Similar malformations were grouped together and assessed for common deletion regions[69]. For clubfoot, six chromosomal deletion regions were found: 2q31-33, 3q23-24, 4p16-14, 7p22, 13q33-34, and 18q22-23, and are candidate regions for harboring genes involved in isolated clubfoot[69]. However, there are 294 known genes in these regions, so further mapping is required to identify the genes associated with clubfoot.

Fine Mapping of Chromosome 2 Deletion Region

Interrogation of the chromosome 2 deletion region associated with clubfoot was performed to narrow the clubfoot candidate region[78]. Nine microsatellite markers spanning the 2q31-33 region were genotyped in 83 trios and 57 families with clubfoot. GATA149B10 and D2S1371 were significantly associated with clubfoot[78]. However, these markers only narrowed the region to 6cM, and further fine mapping was needed. Three candidate genes were identified near one of the satellite markers: *Casp8*, *Casp10*, and *CFLAR*, which are all involved in apoptosis[78]. Eleven SNPs across these three genes were analyzed, and rs3769825 in *Casp8* and rs3900115 and rs3731714 in *Casp10* were associated with clubfoot[78]. These results suggest a role of apoptosis in clubfoot.

Apoptosis

Apoptosis or programmed cell death (PCD) is the process by which cells die in response to cell signals[96]. This process includes chromosome condensation, cell shrinkage, membrane blebbing, formation of apoptotic bodies and degradation of these bodies by surrounding cells[96]. These apoptotic bodies are then taken up and digested by neighboring phagocytes[97]. This process is different from necrosis which does not follow this defined progression of cell death[98]. Apoptosis regulates cell proliferation during development and plays an active role in the homeostasis of cells after embryogenesis. Loss of apoptosis can lead to cancer[98].

Mitochondrial Mediated Apoptosis

There are six protein motifs that are associated with apoptosis: caspase (CASP), caspase recruitment domain, death domain (DD), death effecter domain (DED), BIR domain and BCL-2 homology domain[98]. DDs are required for coupling of death receptors and inter-protein binding of the death-signaling complex, and without them the apoptotic signal could not be transmitted[99]. The extrinsic mitochondrial mediated apoptotic pathway begins with the coupling and self-activation of death receptors in response to their ligands which are released in response to cellular signals[98]. The activated receptors then recruit death domain containing proteins, which activate the extrinsic mitochondria mediated apoptotic pathway (Fig. 3.1)[98].

Activator Caspases

Caspases (*CASP*) 2, 8, 9, and 10 are known as activator caspases and respond to external

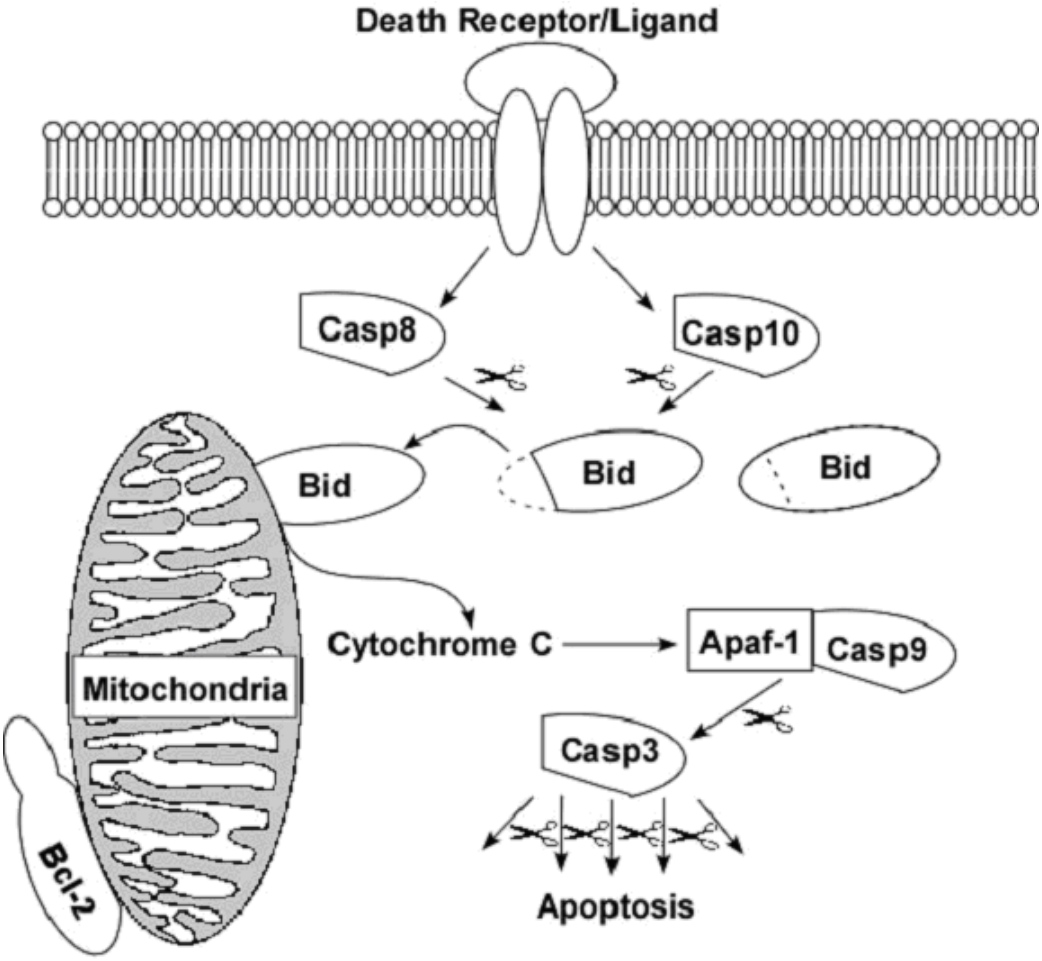

Fig. 3.1. Mitochondrial mediated apoptotic pathway

signals to initiate apoptosis[97]. Caspases cleave after aspartic acid residues and target RNA splicing, DNA repair proteins and other caspases[100]. Caspases are synthesized as inert proteins, procaspases, and activation of caspases lead to the cellular changes seen during PCD [97,100]. Activator caspases have long prodomains that recruit adaptor proteins, and Casp8 and 10 contain death effector domains (DEDs), and the adaptor domains are responsible for activating the caspases[97]. The activated death receptor binds CASP8 and 10 through the DED, activating the proteins and cleaving BID (BH3-interacting domain death agonist), a BCL2 family protein[97].

BID

BID participates in a mitotic checkpoint and maintains genomic stability, but its main role is in the extrinsic mitochondrial mediated apoptotic pathway[101]. Full length BID has been shown to have minor apoptotic activity, but once BID is cleaved by CASP8, the transmembrane domain is able to incorporate into the outer mitochondrial membrane[101]. This insertion stimulates a cascade, leading to permeabilization of the mitochondrial membrane[101]. Once the membrane becomes permeable, cytochrome c is released from the mitochondria[101]. This allows the apoptotic cascade to continue, leading to the eventual degradation of the cell[101].

BCL-2

BCL-2 is an anti-apoptotic member of the BCL-2 family, and is localized to surfaces of membranes, including the mitochondria, nucleus and endoplasmic reticulum[102]. BCL-2 functions to keep the mitochondrial membrane intact, thus preventing the release of cytochrome c during normal cell functions[103]. BCL-2 is targeted by activated BID, and once

BID enters the mitochondria membrane, Bcl-2 can no longer contain cytochrome c within the mitochondria[103]. Once cytochrome c is released, CASP9 and APAF-1 are activated[103].

CASP9 and APAF-1

CASP9 is the most studied and best characterized of the caspases, and activation requires incorporation into the apoptosome[104]. The apoptosome consists of CASP9, cytochrome c, APAF-1, and cofactor dATP/ATP[104]. APAF-1 binds to procaspase 9 in the presence of cytochrome c. The apoptosome can only form when the mitochondrial mediated apoptotic pathway has been activated and cytochrome c has been released from the mitochondria[104]. Once a homodimer of procaspase 9 assembles into the apoptosome, the procaspase has a low level basal activity that is three times higher than that of unbound procaspase 9[104]. This allows auto-activation of CASP9, creating an active apoptosome[104]. The apoptosome then activates CASP3[104].

CASP3

CASP3 has a key role in apoptosis, and is known as an effector caspase[105]. CASP3 cleaves many substrates including poly ADP ribose polymerase (PARP), which is cleaved during apoptosis[105]. Once these substrates are cleaved, the cell undergoes many changes including membrane blebbing[96]. The cell breaks into many different apoptotic bodies, which are then degraded by phagocytes[96].

Study Design

To assess mitochondrial mediated apoptotic genes for association with clubfoot, SNPs were selected spanning seven apoptotic genes, *CASP8, CASP10, BID*, *BCL-2, APAF-1, CASP9* and *CASP3*. Because *CASP8* and *CASP10* were already tested in a smaller sample

set, only the significant SNPs were rerun in the expanded sample. The data set consisted of 82 nonHispanic white (NHW) simplex trios, 88 NHW multiplex families, 128 Hispanic simplex trios and 51 Hispanic multiplex families. Forty SNPs in seven genes were genotyped in these families (Table 3.1).

Results

Allele frequencies in NHW and Hispanics were compared, and because of the large number of comparisons, a conservative threshold of $p<0.00125$ was used to assess significance[106]. No differences in allele frequencies were detected between NHW and Hispanics for the SNPs in *CASP8, 9 and 10*[106]. However, allele frequencies differed for five out of eight SNPs in *CASP3*, five out of seven in *APAF-1*, two out of five in *BCL-2* and two out of eight in *BID* (data not shown)[106]. The two populations were analyzed separately because of these allele differences. Pairwise linkage disequilibrium (LD) was calculated using unaffected individuals, and the patterns of LD were similar between NHW and Hispanics[106]. A representative LD plot for *CASP9* is shown in Table 3.2, which shows that the LD patterns are similar between NHW and Hispanics (all LD plots are found in Appendix A).

Parametric linkage analysis, which assumes a specific mode of inheritance, did not detect linkage for any of the SNPs tested[106]. Non-parametric linkage analysis found suggestive evidence for association for rs1049253 and rs1049216 ($p=0.07$ and 0.06, respectively) in *CASP3* in the Hispanic sample (complete data not shown)[106].

Table 3.1. Location of SNPs analyzed, predicted protein changes and differences in allele frequencies between NHW and Hispanics.

Gene/Chr Region	SNP	Allele	BP Position	Location	AA Change	NHW	Hisp.	P-Value
CASP9 1p36.21	rs35718454	T/G	15725876	Upstream	-	0.534	0.575	0.092
	rs1052571	G/A	15723200	Exon 2	A28V	0.584	0.622	0.307
	rs4646008	G/A	15717314	Exon 2	S99L	0.996	0.999	0.254
	rs2308941	G/A	15717305	Exon 2	T102I	0.977	0.981	0.651
	rs2020897	C/G	15717268	Exon 2	E114D	0.993	0.994	0.475
	rs1820204	A/G	15717202	Exon 2	F136L	0.522	0.587	0.047
	rs2042370	G/A	15714329	Intron 2	-	0.564	0.612	0.135
	rs2308950	C/T	15706093	Exon 4	R173H	0.970	0.988	0.161
	rs4233533	G/A	15701774	Intron 6	-	0.711	0.738	0.723
CASP10 2q33.1	rs3900115	A/G	201758922	Exon 3	Synon.	0.541	0.612	0.051
	rs3731714	A/G	201769065	Intron 5	-	0.772	0.769	0.916
CASP8 2q33.1	rs3769825	C/T	201819625	Intron 9	-	0.503	0.538	0.346
CASP3 4q35.1	rs1049253	C/T	185785945	3' UTR	-	0.796	0.851	0.092
	rs1049216	T/C	185787083	3' UTR	-	**0.716**	**0.439**	**< 0.00001**
	rs1049210	C/A	185789219	Exon 7	E190D	0.995	0.998	0.820
	rs1405944	T/A	185790347	Intron 5	-	**0.512**	**0.249**	**< 0.00001**
	rs2696057	G/C	185792828	Intron 4	-	0.834	0.809	0.130
	rs2720378	C/G	185805107	Intron 2	-	**0.714**	**0.434**	**< 0.00001**
	rs4647602	A/C	185806795	Intron 1	-	**0.921**	**0.651**	**< 0.00001**
	rs1405937	G/C	185808932	Upstream	-	**0.837**	**0.562**	**< 0.00001**
APAF-1 12q23.1	rs7310804	A/G	97543189	3' UTR	-	0.514	0.458	0.108
	rs2278361	A/G	97567338	Intron 2	-	**0.789**	**0.712**	**< 0.00001**
	rs2288729	T/C	97591721	Intron 10	-	**0.652**	**0.618**	**0.00008**
	rs6538879	A/G	97612225	Intron 14	-	**0.750**	**0.732**	**0.00072**
	rs3782558	G/C	97629924	Intron 17	-	0.541	0.561	0.061
	rs1866477	G/T	97643964	Intron 22	-	**0.885**	**0.929**	**0.00076**
	rs7968661	A/G	97661515	Downstream	-	**0.680**	**0.628**	**0.00003**
BCL-2 18q21.33	rs1564483	A/G	58945634	3' UTR	-	**0.742**	**0.884**	**0.00003**
	rs8083946	G/A	59056901	Intron 1	-	0.606	0.548	0.936
	rs1801018	T/C	59136859	Exon 3	Synon.	0.579	0.575	0.274
	rs2551402	C/A	59141002	Downstream	-	**0.515**	**0.631**	**0.00004**
	rs1809319	C/T	59173614	Downstream	-	0.663	0.600	0.005
BID 22q11.21	rs8919	G/A	16593057	Upstream	-	0.532	0.432	0.007
	rs181399	T/C	16605318	Intron 3	-	0.821	0.858	0.941
	rs2072392	A/G	16606612	Exon 3	Synon.	0.973	0.963	0.509
	rs8190315	T/C	16606764	Exon 3	S56G	0.976	0.982	0.322
	rs181405	G/A	16613000	Intron 1	-	0.535	0.439	0.075
	rs181410	A/T	16617436	Intron 1	-	0.655	0.804	0.007
	rs5747351	A/G	16626375	Intron 1	-	**0.601**	**0.436**	**< 0.00001**
	rs3788284	G/C	16632103	Intron 1	-	**0.555**	**0.433**	**0.00023**

AA = amino acid, Synon.=synonymous, NHW= nonHispanic white, Hisp.=Hispanic; Chromosome position noted under gene

All single SNPs with a $p<0.1$ are shown in Table 3.3. rs3769825 (*CASP3*) and rs2551402 (*BCL-2*) gave p-values of 0.05 and 0.07, respectively in the Hispanic simplex cases (Table 3.3)[106]. No SNPs had an altered transmission in the Hispanic multiplex families. In the nonHispanic white simplex trios, rs2278361 and rs2288729 in *APAF-1* and rs2551402 in *BCL-2* yielded p-values of 0.03, 0.06 and 0.06, respectively[106]. SNPs rs2278361 and rs2288729 in *APAF-1* were in strong LD (Appendix A). In the nonHispanic white multiplex families, rs4233533 in *CASP9* and rs2696057 in *CASP3* gave nonsignificant p-values of 0.09 and 0.08, respectively[106]. Results from the PDT analysis were similar to the FBAT results (Table 3.3)[106]. However, two SNPs with suggestive p-values were identified in the Hispanic multiplex families; one in *CASP10* (rs3731714) and the other in *BID* (rs2072392), which were not detected by FBAT[106].

Haplotypes were generated using HBAT and are shown in Table 3.4. The haplotypes are not true haplotypes because the SNPs do not reside in same gene or on the same chromosome. However, in complex diseases, the underlying etiology is assumed to involve variants in multiple genes which are not necessarily on the same chromosome. By identifying these haplotypes, we can begin to determine gene-gene interactions[106]. SNPs with $p \leq 0.1$ in one population were evaluated in all populations. In the Hispanic simplex trios, an overall altered transmission of both haplotypes of rs3739825 and rs2551402 in the *CASP3* and *BCL-2* haplotype was found ($p=0.017$)[106]. In the NHW simplex trios, altered transmission of haplotypes for rs2278361 (*APAF-1)* and rs2551402 (*BCL-2)* and rs2288729 (*APAF-1)* and rs2551402 (*BCL-2)* were found ($p=0.03$, $p=0.02$ respectively)[106]. Because rs2278361 and rs2288729 are in strong LD, only one was considered in each of the

Table 3.2. LD plot for *CASP9*.

	hcv2845956	rs4233533	rs2308950	rs2042370	rs1820204	rs2020897	rs2308941	rs4646008	rs1052571
hcv2845956		0.96	1.00	0.98	0.95	0.95	1.00	0.85	0.98
rs4233533	0.92		1.00	0.82	1.00	1.00	1.00	1.00	0.82
rs2308950	0.18	0.10		0.92	1.00	0.48	1.00	1.00	1.00
rs2042370	0.97	0.91	1.00		1.00	1.00	1.00	1.00	0.93
rs1820204	0.97	0.98	0.22	0.99		0.00	1.00	1.00	0.98
rs2020897	0.99	1.00	1.00	1.00	1.00		1.00	1.00	1.00
rs2308941	1.00	0.31	0.23	0.29	1.00	1.00		1.00	1.00
rs4646008	0.00	0.00	0.00	0.00	0.00	0.00	0.00		1.00
rs1052571	0.93	0.87	1.00	0.95	0.96	1.00	0.36	0.00	

NonHispanic whites shown above the diagonal, Hispanics shown below the diagonal. $p<0.05$ shown in yellow.

Table 3.3. Apoptotic single SNP results by population.

Group	SNP	FBAT	PDT	
			Global	*Summed*
Hispanic-Simplex	rs3769825 (*CASP8*)	0.05	0.09	0.03
	rs2551402 (*BCL-2*)	0.07	0.08	0.06
Hispanic-FH	rs3731714 (*CASP10*)	-	0.06	> 0.1
	rs2072392 (*BID*)	-	0.07	0.05
NHW-Simplex	rs2278361* (*APAF-1*)	0.03	0.04	0.06
	rs2288729* (*APAF-1*)	0.06	0.08	0.1
	rs2551402 (*BCL-2*)	0.06	0.07	0.04
NHW-FH	rs4233533 (*CASP9*)	0.09	> 0.1	> 0.1
	rs2696057 (*CASP3*)	0.08	0.08	0.05

*SNPs in LD, NHW=nonHispanic white

Table 3.4. Apoptotic haplotype analysis.

Group	SNPs	Haplotype	p Value	Transmitted		Overall p-Value
				Obs.	Exp.	
Hispanic-Trios	rs3739825/rs2551402 *CASP8/BCL-2*	1-2	**0.0019**	42	52	**0.017**
		2-1	0.059	30	25	
NHW-Trios	rs2278361/rs2551402 *APAF-1/BCL-2*	1-2	0.03	33	36	ns
	rs2288729/rs2551402 *APAF-1/BCL-2*	1-1	0.02	17	12	ns
NHW-FHx	rs4233533/rs2696057 *CASP9/CASP3*	2-2	0.02	83	74	ns

Obs.=observed, Exp.=expected, NHW= nonHispanic white, FHx=multiplex families, ns=not significant

haplotypes. Lastly, in the NHW multiplex families, altered transmission of a *CASP9* and *CASP3* haplotype (rs4233533/rs2696057) was detected (p=0.02)[106].

EMDR analysis was utilized to generate 1-, 2-, 3- and 4-locus models that discriminate between affecteds and unaffecteds for simplex trios. This method identifies which SNPs depending on the number of loci considered are best at segregating the affected from the nonaffected individuals[106]. This analysis can identify high risk haplotypes by categorizing which SNPs are most likely to confer risk. As shown in Table 3.5, none of the SNPs represented under different models produced significant results. Based on our results, rs3769825 in *CASP8* was identified as a SNP of interest[106].

Discussion

In this study, we interrogated seven apoptotic genes, *CASP3, CASP8, CASP9, CASP10, BID, BCL-2* and *APAF-1,* using 40 SNPs and tested for linkage and association with clubfoot[106]. Suggestive evidence for association was found for a SNP in each of the seven genes, *CASP3, CASP8, CASP9, CASP10, BID, BCL-2* and *APAF-1*[106]. Gene-gene interactions were identified with altered transmission of multi-gene haplotypes in both NHW and Hispanics[106]. Lastly, one SNP, rs3769825 in *CASP8* was also found to be the best discriminator between affecteds and unaffecteds in the Hispanic simplex trios[106]. All together these results suggest that the interaction of several genes within the mitochondrial mediated apoptotic pathway influences the development of clubfoot[106].

Of interest, a previous analyses identified altered transmission of rs3900115 in *CASP10* in three of the four sample groups tested in clubfoot families.[107] While only the Hispanic multiplex families gave suggestive results, this study identified a different *CASP10* SNP (rs3731714) as the best single locus model (although this result was not significant)[106]. This

Table. 3.5. High risk haplotypes*.

Model	NHW			
1 locus	rs3731714 (*CASP10*)			
2 locus	rs7968661 (*APAF-1*)	rs1809319 (*BCL-2*)		
3 locus	rs3782558 (*APAF-1*)	rs7968661 (*APAF-1*)	rs1809319 (*BCL-2*)	
4 locus	rs4233533 (*CASP9*)	rs1405937 (*CASP3*)	rs8083946 (*BCL-2*)	rs181405 (*BID*)
Model	**Hispanic**			
1 locus	rs3769825 (*CASP8*)			
2 locus	rs1052571 (*CASP9*)	rs3769825 (*CASP8*)		
3 locus	rs2720378 (*CASP3*)	rs8919 (*BID*)	rs5747351 (*BID*)	
4 locus	rs1049216 (*CASP3*)	rs2720378 (*CASP3*)	rs8919 (*BID*)	rs5747351 (*BID*)

NHW=nonHispanic white, *EMDR analysis

lack of consistent findings may reflect a difference in the clubfoot data sets that have expanded as more samples were collected. Since other SNPs within genes in this pathway have yielded suggestive results, we are encouraged that this pathway contributes to the clubfoot[106].

In complex diseases, it is expected that perturbation of multiple interacting genes are necessary for the birth defect and may reflect a high risk haplotype[106]. The haplotype based function of FBAT (HBAT) can be used to identify altered transmission of haplotypes in both families and trios. "Multifactor dimensionality reduction (MDR) analysis can also detect at-risk haplotypes constructed from multiple genes, but the haplotypes are created by using a case-control based algorithm instead of family based algorithms such as used in HBAT"[106].

The findings of this study and the known role of apoptosis in limb and muscle development strongly suggest that further interrogation studies of additional apoptotic genes and upstream signaling factors that activate apoptosis are necessary and are the focus of studies described in Chapter 4.

Chapter 4: Analysis of Candidate Genes in Clubfoot Deletion Regions

Introduction

Isolated clubfoot is a common birth defect, occurring in 1/700-1000 live births affecting 135,000 newborns each year[38,40,65,108]. Talipes equinovarus (TEV) is identified by three clinical foot characteristics: forefoot adduction, hindfoot varus and hindfoot equinus[109]. The tarsal joint is also misaligned and the arch is often more concave[110]. Calf muscles are frequently hypoplastic and remain smaller throughout life[110]. Isolated clubfoot is distinct from syndromic clubfoot in that it occurs without any other anomalies. Males are affected twice as often as females and the frequency varies across ethnicities[65]. Treatment consists of serial castings for six weeks with casts being changed every week[110]. Soft tissue releases, bony procedures and/or tendon transfers are sometimes needed following serial casting and bracing[110].

Clubfoot is a complex birth defect caused by both genetic and environmental factors[65]. Several environmental factors have been suggested to contribute to clubfoot, but only maternal smoking has been consistently associated[57-59]. Evidence supporting a genetic etiology for clubfoot comes from (1) aggregation of clubfoot in families, (2) twin studies which demonstrate a 32.5% concordance in monozygotic twins compared to 2.9% in dizygotic twins and (3) segregation analyses, which have suggested that clubfoot is most likely caused by a single gene with major effects as well as other genes with minor effects and environmental factors[44,45,58,67].

A previous study interrogated minimal overlapping chromosomal deletion regions in individuals with large deletions that had clubfoot as a phenotype. That study found six large chromosomal deletion regions, 2q31-33, 3q23-24, 4p16-14, 7p22, 13q33-34 and 18q22-23, shared among individuals with syndromic clubfoot[69]. Investigation of those regions using Ensembl database (www.ensembl.org) identified 194 known genes[69]. Of these genes, there were 52 candidate genes involved in apoptosis, muscle development, morphogenesis and cell

proliferation (www.source.stanford.edu). Interestingly, apoptotic pathway genes were identified in each of the six deletion regions which was remarkable because apoptotic genes have been previously associated with clubfoot (Table 4.1 and Fig. 4.1) [106].

Table 4.1. Apoptotic genes in chromosomal deletion regions

2q31-33	3q23-34	4p14-16	7p22	13q33-34	18q22-23
ZAK	*RNF7*	*TLR10*	*RBAK*	*ING1*	*SOCS6*
CERKL	*ATR*	*TLR1*	*TRIAD3*	*TFDP1*	*NFAT2*
GULP1	*SSB4*	*TLR6*	*CARMA1*	*TNFSF13B*	*TNFRSF11A*
SUMO1	*TFDP2*	*WDR19*			
ATF		*HIP2*			
CREB1		*EMP*			
STAT1		*HTT*			
STAT4		*TNIP2*			

The 29 candidate apoptotic genes can be broken down into several groups: immune response genes that stimulate apoptosis, transcription factors, genes involved in engulfment of apoptotic bodies, and other apoptotic genes. A summary about each of these genes are presented below.

Immunity Related Genes

ZAK

Leucine-zipper sterile α-motif (ZAK) is a serine/threonine kinase, which activates the c-Jun N-terminal kinase (JNK) pathway and the transcription factor NFκB through the MAP kinase kinase (MKK) pathway[111]. Activation of ZAK can lead to cell arrest in the G2/M stage of the cell cycle, and prolonged expression of ZAK induces apoptosis through the JNK pathway by activating MAPKK 7 (MKK7)[111].

SUMO1

Small ubiquitin related modifier 1 (SUMO1) can be conjugated to proteins, leading to a regulation of these proteins[112]. This attachment is processed through several enzymes similar to ubiquitination, although "SUMOylation does not lead to degradation"[112]. SUMO1 has been shown to interact with DAXX, which is a transcriptional repressor involved in the

apoptotic pathway (www.source.standford.edu)[113]. In addition, SUMO1 sumoylates NFκB, which is a transcription factor that regulates apoptosis and inflammation[114].

RNF7

Ring finger protein 7 (RNF7) is also known as sensitive to apoptosis gene (SAG), and is an E3 ubiquitin ligase[115]. Ubiquitin is a protein that is ligated to other proteins through a series of three ligases and marks the protein for degradation[115]. RNF7 ubiquitinates c-Jun and inhibits AP-1 and cell proliferation[115]. In addition, RNF7 conjugates ubiquitin to the inhibitor of NFκB, increasing the levels of NFκB and inhibiting apoptosis[115].

TLR Family

The canonical pathway for toll-like receptors (TLRs) involves the anti-microbial immune response, however recent studies have shown that TLRs can activate apoptosis[116]. Apoptosis it thought to be activated during an immune response to limit the pathologic effects of the immune system[116]. TLRs activate adapter proteins that bind and activate IRAK kinases, which then activate TRAF6, a ubiquitin ligase [116]. This leads to the canonical activation of NFκB, which activates MAPKKs and then finally apoptosis[116]. So far, only TLRs 2, 3, 4, 7, 8 and 9 have been identified as activators of this pathway[116]. TLR 1, 6 and 10 are in the clubfoot deletion regions, but the role of these TLR family members in apoptosis is not known.

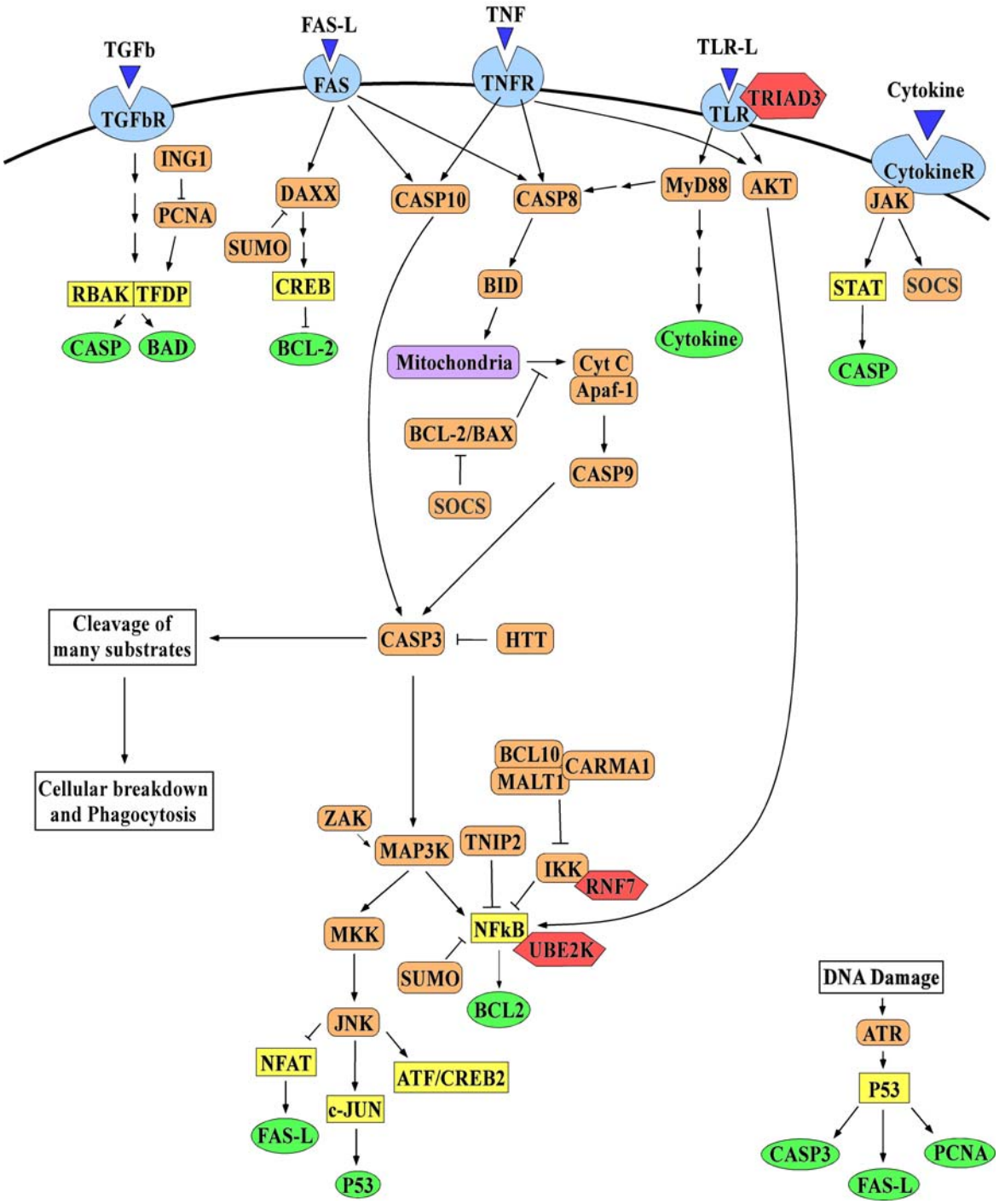

Fig. 4.1. Apoptotic gene pathway in clubfoot chromosomal deletion regions. Interactions between apoptotic, anti-apoptotic and immunity genes found in each of the clubfoot deletion regions. Arch at the top of the page denotes the cell membrane. Color codes for genes are: red = ubiquitin ligase, orange = protein, yellow = transcription factor, green = transcription factor target, blue = receptor, dark blue = ligand

UBE2K

Ubiquitin ligase Kinase 2 (UBE2K) was initially discovered to interact with HTT, but its targets also include the precursor of NFKB[117]. Once the ubiquitin is ligated to NFKB it is rapidly degraded into a smaller, active form[117]. However, activated NFKB is sequestered in the cytoplasm by IKB as a second mechanism of control[117]. UBE2K is critical for NFKB activation, and NFKB acts as an anti-apoptotic factor by increasing expression of BCL-2.

TNIP2

TNIP2 or A-20 binding inhibitor of NFKB (ABIN2) promotes apoptosis through the inhibition of NFKB[118]. TNIP family members are involved in the negative feedback loop of NFKB that prevents overexpression that leads to immunological disorders[118]. However, TNIP2 is not activated by NFKB, although still activates apoptosis through NFKB inhibition[118].

TRIAD3

TRIAD3 (zinc finger protein inhibiting NFκB) is an E3 ubiquitin protein ligase[119]. The main role for TRIAD3 is regulating TLRs activity through degradation of TLRs[119]. In addition, TRIAD3 prevents the cell from undergoing apoptosis by downregulating signaling molecules involved in the TLR activation of NFKB[120].

CARMA1

CARMA1 is also known as caspase recruitment domain 11 (CARD11), and complexes with BCL10 and MALT1 (paracaspase)[121]. This complex activates IKK, which releases repression of NFKB and leads to the immune response[121]. "The stimulation of surface receptors on immune cells triggers not only changes gene

expression but also morphological changes through the reorganization of the actin cytoskeleton, thereby contributing to efficient cellular activation[121]." This suggests that the genes involved in the immune response may have a secondary function in the development of muscles and the muscle contraction apparatus.

TNFSF

Tumor necrosis factor superfamily (TNFSF) is a large family of receptors and ligands that stimulate the immune response, apoptosis and cell survival[122]. TNFRSF11A is also known as receptor activator of NFκB ligand (RANK) and is essential to osteoclast formation and activation[123]. However, RANK is also expressed in lungs, kidneys and skeletal muscle[123]. RANK induces downstream expression of AKT and NFκB, and therefore is anti-apoptotic[123].

HTT

Huntington disease is caused by a CAG repeat expansion in the huntingtin protein (HTT). The HTT protein plays a role in suppressing apoptosis[124]. Functional HTT is essential for embryonic development, and overexpression of HTT prevents cleavage of PAKs by CASP3[124]. PAKs are kinases that regulate cell survival, and HTT protects cells that are exposed to apoptotic inducing signals by preventing cleavage of PAKs[124].

Transcription Factor Genes

STAT1 and STAT4

Signal transducers and activators of transcription (STAT) proteins are transcription factors that regulate several cellular processes including cell proliferation, apoptosis, differentiation and angiogenesis[125]. STATs are activated by the Janus tyrosine kinase (JAK) pathway, but can also be activated by an inherent tyrosine kinase activity of

growth factors[125]. STAT1 "is considered a tumor suppressor since it inhibits growth and acts as a proapoptotic factor", and can stimulate caspase expression[125].

ATF2/CREB2

ATF2 is a member of the leucine zipper activator protein 1 (AP-1) transcription factor family[126]. These proteins can form homo- or heterodimers between family members to stimulate gene expression[126]. ATF2 is activated by the JNK pathway and is upregulated as is c-Jun, of which a majority heterodimerize[126]. The c-Jun/ATF2 heterodimer leads to apoptosis in response to cellular stress, and when this complex is blocked, apoptosis is inhibited[126]. Homodimers of ATF2 can not lead to apoptosis, nor can an overexpression of c-Jun cause cell death, suggesting that ATF can only induce apoptosis when bound to c-Jun[126].

NFAT2

Nuclear factor of activated T-cells (NFAT) is a family of calcium dependent transcription factors[127]. NFAT2 is expressed in most cells involved in the immune response, but is also expressed in other cells, although not ubiquitously expressed[127]. NFAT2 has been shown to regulate skeletal muscle through control of myocyte differentiation[127]. In addition, NFAT2 stimulates apoptosis through several pathways including the FAS ligand and glucocorticoid induced apoptosis[127].

CREB1

CREB (c-AMP dependent response element binding protein) is activated along with AP-1 genes and the JNK pathway in response to oxidative stress and regulates genes involved in cellular proliferation and apoptosis[128]. CREB recruits c-AMP and other cofactors to CRE binding sites, which are necessary for activation of target genes

including c-FOS and BCL-2[128]. CREB has been shown to downregulate production of BCL-2, and inhibition of CREB results in an increase in BCL-2 transcription and cell survival[128]. Therefore, CREB1 is a pro-apoptotic protein.

TFDP1/2

Transcription factor DP2 (TFDP2) dimerizes with E2F family members and increases transcription of target genes including those involved in apoptosis and the cell cycle[129]. Targets of DP2 include *ARF, ATM, CASP8, CASP3/7, CASP9* and *BAK/BAD* (pro-apoptotic members of the BCL-2 family)[130]. The p53 mediated apoptotic pathway is activated by DP proteins, and this cascade stimulates the mitochondrial mediated apoptotic pathway[130].

RBAK

Retinoblastoma-associated Kruppel-associated box protein (RBAK) is a transcription factor that is widely expressed in embryonic and adult tissues[131]. RBAK and acts as a transcriptional repressor by dimerizing with E2F proteins. It can also stop the cell from progressing to the synthesis stage of the cell cycle[131]. Many of the E2F targets are proapoptotic genes (see TFDP1/2) which can be repressed by RBAK[131].

Engulfment of Apoptotic Body Genes

EMP

Erythroblast macrophage protein (EMP) is expressed in both erythroblasts and macrophages and helps adhesion between these two cell types during blood production and in the fetal liver[132]. EMP is required for normal differentiation of erythroblasts, and targeted disruption of this protein leads to an embryonic lethal mouse[132]. When

erythroblasts are cultured in the presence of an anti-EMP antibody a six-fold increase in apoptosis was seen[132].

GULP1

Rapid processing of apoptotic bodies is important during embryogenesis[133]. GULP1 acts in the engulfment of apoptotic bodies[133]. GULP1 is highly conserved, and in fact can rescue *c. elegans* deficient in the GULP1 homolog CED-6[133]. GULP1 also interacts directly with low density lipoprotein-related protein 1 (LRP-1) and multiple epidermal growth factor domains 10 (MEGF10), which are also involved in engulfing apoptotic bodies[133].

Other Apoptosis Related Genes

ING1

Inhibitor of growth (ING) proteins are a family of highly conserved apoptotic proteins[134]. ING1 and ING3 both stimulate apoptosis, but through separate arms of the apoptotic pathway. ING1 inhibits PCNA, which inhibits apoptosis and activates p53[134]. ING1 mice knockouts show increased apoptosis in response to radiation, which suggests that ING1 has an anti-apoptotic role in response to DNA damage[134]. However, during embryogenesis in *Xenopus laevus* ING1 has a proapoptotic expression pattern[134].

ATR

Ataxia-Telangiectasia Mutated and Rad-3 related (ATR) is in the DNA damage pathway, and has an anti-apoptotic effect in response to this damage[135]. ATR activates Chk1, which prolongs activity at the replication forks and restarts replication forks where activity has been aborted[135]. The ATR pathway leads to inhibition of apoptosis, and cells

depleted of Chk1 activate CASP3[135]. ATR also phosphorylates and activates p53, leading to apoptosis[136].

SOCS6

Suppressors of cytokine signaling (SOCS) block signaling of cytokines, "a large family of secreted glycoproteins that regulate fundamental biological processes, including embryonic development, immunity, and haematopoiesis"[137]. Little is known about the function of SOCS6, but family members SOCS1-3 have been well characterized. SOCS1 deficient mice develop normally but have a low lymphocyte count due to an inhibition of anti-apoptotic BCL-2 family member BAX[137]. In addition, SOCS1 acts in a feedback loop by inhibiting cytokine signaling[137].

CERKL

Ceramide-kinase like (CERKL) is involved in the metabolism of ceramide, a sphingolipid[138]. Sphingolipids are lipid messengers that act as cell sensors produced in response to cell stress, cytokines, and cytotoxins and initiate apoptosis[138]. However, anti-apoptotic signals can inhibit apoptosis by removing ceramide from the cell through phosphorylation by a ceramide kinase such as CERKL.

WDR19

Little is known about WDR19, but expression has been found in several expression arrays. One expression profile found that WDR19 is expressed in the quadriceps, although at lower levels than in extraocular muscle[139]. Apoptosis induced by overexpression of E2-F1 and treatment with doxyrubicin, increased expression of WDR19 in melanoma cells [140].

Apoptotic genes play an important role in limb and muscle morphogenesis. All of the genes that encode proteins discussed above are involved in some part of the apoptotic pathway, and all are located in the clubfoot deletion regions. Interestingly, many of the genes involved in this pathway interact through NFκB, which has been show to be involved in muscle development and critical to the immune response (Fig 4.1)[141]. Because these genes could potentially perturb muscle development during embryogenesis, this study was undertaken to determine whether genetic variation in these candidate genes is associated with isolated clubfoot.

Methods

Sample Collection

This study was approved by the University of Texas Committee for Protection of Human Subjects (HSC-MS-04-239) and the IRBs of all participating centers. Probands with clubfoot were identified through Shriners Hospitals for Children of Houston and Los Angeles, University of Vancouver, British Columbia and the Scottish Rite Hospital of Dallas. Individuals with chromosomal abnormalities, syndromes or postnatal events associated with clubfoot were excluded. Only cases of isolated clubfoot and their family members were included in the study. Ethnicity was self-reported. The sample was composed of 304 simplex trios, of which 124 were non-Hispanic white and 180 were Hispanic, and 179 multiplex families, of which 105 were non-Hispanic white and 74 Hispanic.

DNA Extraction and Genotyping

DNA was extracted from blood and/or saliva samples collected from all individuals. DNA was extracted from blood using the DNA Isolation Kit for Mammalian Blood (Roche, Palo Alto, CA) or saliva with Oragene Purifier (DNA Genotek Inc., Ottawa, Ontario, Canada). Samples were genotyped using SNPlex™ Genotyping System following the manufacturer's protocol (Applied Biosystems, Foster City, CA) and analyzed on a 3730 DNA Analyzer using GeneMapper® 4.0 (Applied Biosystems, Foster City, CA).

Data Analysis

Several software programs were used to test for association including Pedigree Disequilibrium test (PDT) and Association in the Presence of Linkage (APL)[91,142]. The Geno-PDT, a modified version of the PDT, was employed to test for specific genotypes when considering dominant or recessive models[75]. Altered transmission of pairwise haplotypes within a gene was determined using APL. SNPs were then evaluated for gene-gene interactions using Generalized Estimating Equations (GEE)[92].

Results

One hundred ninety-two SNPs in 29 apoptotic genes were genotyped in 304 simplex simplex (124 NHW and 180 Hispanic) and 179 multiplex families (105 NHW and 74 Hispanic). All SNPs and locations are shown in Appendix B, Table B1. Call rates were lower than those found in previous genotyping studies using Taqman assays. Genotyping was performed using ABI SNPlex, which often produces varying results. For some of the SNPs, some data plots required manual calls and for others genotypes could not be

determined. Fifty-six of the SNPs were out of HWE, which is most likely related to the low call rates. These SNPs were excluded from further analysis resulting in 165 SNPs analyzed in the NHW group and 157 SNPs in the Hispanic group.

Significant associations were found in the single SNP analysis with little overlap between Hispanics and NHW groups (Table 4.2). For the NHW group, the most significant finding was found by all three tests for rs4690055 in *TNIP2* in the simplex families (Table 4.2A). TNIP2 functions as an inhibitor of NFκB as does TLR10. rs11096957, in *TLR10*, is a nonsynonymous coding SNP (N241H) that was significant in simplex (p=0.003) and in the aggregate (p=0.004) groups. TNFSF13B stimulates apoptosis through *CASP3*, although it can also activate *NFKB* (Fig 4.1). Interestingly, rs9520835 in *TNFSF13B* was significant in the aggregate NHW group (APL p=0.004 and PDT p=0.009) and in the multiplex families (p=0.005). Altered transmission was also found for a SNP in *CREB1, TRIAD3, GULP1* and *EMP/MAEA* genes.

In the Hispanic group, four SNPs in the *NFATC1* (rs8097537, rs3894049, rs12608349 and rs370989) showed altered transmission (Table 4.2B). NFATC1 is responsible for activating the apoptotic pathway through the FAS receptor (Fig 4.1). Two of the four significant *NFATC1* SNPs, rs8097537 (p=0.0004) and rs3894049 (p=0.0002) were identified by all three analytic programs. Altered transmission in the aggregate and simplex groups was found for all four *NFATC1* SNPs. However, rs370989 was also significant in the multiplex families (p=0.001). FAS can also activate NFκB through Casp10 and the MAP kinase pathway (Fig 4.1). ZAK also activates NFκB through the MAP kinase pathway. Altered transmission of rs11686011 in the *ZAK* gene was found for the aggregate group (p=0.007), but not when stratified by family history. Altered

Table 4.2. Apoptosis genes: Single SNP results

A. NHW

Families	SNP	Gene	Gene Loc.	APL	PDT	GenoPDT
Combined	rs11096957	*TLR10*	E4 N241H	**0.004**	0.041	0.148
	rs9520835	*TNFSF13B*	I3	**0.004**	**0.009**	0.023
Multiplex	rs10932201	*CREB1*	I4	**0.005**	0.137	0.081
	rs9520835	*TNFSF13B*	I3	**0.005**	0.113	0.166
	rs11771172	*TRIAD3*	I2	**0.006**	0.336	0.361
Simplex	rs6724428	*GULP1*	I4	**0.006**	0.025	0.112
	rs1316393	*EMP/MAEA*	I3	**0.010**	0.063	0.114
	rs11096957	*TLR10*	E4 N241H	**0.003**	0.090	0.203
	rs4690055	*TNIP2*	I2	**0.004**	**0.001**	**0.007**

B. Hispanic

Families	SNP	Gene	Gene Loc.	APL	PDT	GenoPDT
Combined	rs10930693	*CREB2*	I3	0.038	**0.005**	0.013
	rs12608349	*NFATC1/NFAT2*	I4	0.102	0.061	**0.001**
	rs370989	*NFATC1/NFAT2*	I10	**0.003**	**0.003**	**0.003**
	rs3894049	*NFATC1/NFAT2*	I10	**0.0002**	**0.001**	**0.004**
	rs8097537	*NFATC1/NFAT2*	I3	0.025	**0.0004**	**0.002**
	rs2280233	*STAT1*	I14	0.155	**0.007**	0.040
	rs6751855	*STAT1*	U	0.144	0.491	**0.010**
	rs7239261	*TNFRSF11A*	I1	**0.007**	0.075	0.179
	rs8094884	*TNFRSF11A*	I6	0.071	**0.010**	0.111
	rs852374	*TRIAD3*	D	**0.005**	**0.003**	0.020
	rs11686011	*ZAK*	I14	**0.007**	0.182	0.299
Multiplex	rs6446723	*HTT*	I10	**0.0004**	0.330	0.587
	rs370989	*NFATC1/NFAT2*	I10	**0.001**	0.274	0.164
	rs4941125	*TNFRSF11A*	I1	**0.0004**	0.608	0.810
	rs852522	*TRIAD3*	I13	**0.006**	0.017	0.116
Simplex	rs10930693	*CREB2*	I3	0.024	**0.004**	**0.006**
	rs12608349	*NFATC1/NFAT2*	I4	0.021	0.016	**0.005**
	rs370989	*NFATC1/NFAT2*	I10	0.077	**0.003**	**0.009**
	rs3894049	*NFATC1/NFAT2*	I10	**0.007**	**0.0001**	**0.0003**
	rs8097537	*NFATC1/NFAT2*	I3	0.053	**0.0003**	**0.001**
	rs13065446	*TFDP2*	U	0.369	0.194	**0.009**

Gene Loc = gene location: I = intron, D = downstream, U = upstream,

transmission was also found for one or two SNPs in *CREB2, STAT1, TNFRSF11A, TRIAD3, HTT* and *TFDP2* genes.

While overall there was little overlap between SNP variants detected in the NHW and Hispanic groups, there were some interesting similarities. For example, two different SNPs in *TRIAD3* showed altered transmission in both groups (Table 4.2). rs11771172 in *TRIAD3* (p = 0.006) was significant in the multiplex NHW families only, whereas rs852374 was significant in the aggregate and multiplex Hispanic families. This suggests that *TIRAD3* is important in both ethnic groups. TRIAD3 inhibits NFκB activity by inhibiting TLR. rs10932201 in *CREB1* was significantly associated in the multiplex NHW families (p=0.005), while rs10930693 in *CREB2* was significant in the aggregate (p=0.005) and simplex (p=0.004) Hispanic families. *CREB1* and *CREB2* are members of a gene family that function in different branches of the apoptotic pathway. It is interesting that different genes in the same pathway were significantly associated in the different ethnic groups. Similarly, two SNPs, rs7239261 and rs8094884, in *TNFRSF11A* receptor demonstrated altered transmission in the aggregate (p=0.007 and 0.01, respectively) Hispanics families, whereas rs9520835, in *TNFSF13B*, a ligand family member, showed altered transmission in the aggregate (p = 0.004/0.009) and multiplex (p = 0.005) NHW families. This suggests that the same genetic pathway is being perturbed in different ethnic groups but by variation in different members of the same gene family.

Seven two-SNP haplotypes in five genes in the NHW group and 28 two-SNP haplotypes in five different genes in the Hispanic group found (Table 4.3). The most significant haplotype in the NHW group involved rs1451821 and rs3733280 in *WDR19* (p=0.002). Interestingly, most haplotypes in the NHW group do not include significant

variants from the single-SNP analysis. For example, only one significant haplotype, contained a SNP, rs6724428 (*GULP1*), that showed altered transmission in the single-SNP analysis (Table 4.3A, p=0.005). However, three significant haplotypes were identified for *GULP1*. rs10931359 (*GULP1*) was involved in two haplotypes with rs7593946 (p=0.009) and rs12624002 (p=0.004).

In contrast, for the Hispanic group, 25 of the 28 significant two-SNP haplotypes contained SNPs that showed significantly altered transmission in the single-SNP analysis (Tables 4.3B). However, the most significant haplotypes were found for SNPS in *TRIAD3* and *NFAT2*. rs852374 showed altered transmission with seven other TRIAD3 SNPs and rs3894049 with nine SNPs in *NFAT2*. This may be due to linkage disequilibrium between the variants, and this analysis is ongoing. Interestingly, the overtransmitted allele for rs3894049 in most of the haplotypes is allele 2, but in the rs4799055/rs3894049 haplotype the overtransmitted allele for rs3894049 is allele 1, which is the opposite of all the other haplotypes (p=0.001). The significant SNP haplotypes for *WDR19* and *CARD11* did not include the SNPs identified in the single SNP analysis.

Twenty-two gene-gene interactions were identified and there was no overlap when comparing by ethnicity (Table 4.4). For the NHW group, the most significant gene interactions were between rs6769676 in *RNF7* and rs4273389 in *ATR* (p=0.0001) and rs1517352 in *STAT4* and rs11096957 in *TLR10* (p=0.0001). The most significant interactions in the Hispanic group were between rs4675272 in *SUMO1* and rs9520835 in *TNFSF13B* (p=0.0002), rs925847 in *STAT4* and rs8094884 in *TNFRSF11A* (p=0.0003), and rs4972533 in *ZAK* and rs3779092 in *TRIAD3* (p=0.0003). Interestingly, *TNFSF13B*

Table 4.3. Two-SNP Haplotypes Results

A. NHW

Gene	SNP 1	SNP 2	p-value	OT	UT
ATR	rs6440085	rs6792259	**0.003**	**22**	**-**
GULP1	rs7593546	rs10931359	**0.009**	**21**	**-**
	rs12624002	rs10931359	**0.004**	**11**	**12**
	rs6724428	rs1354905	**0.005**	**12**	**11**
ING1	rs1441043	rs6492308	**0.005**	**21**	**-**
WDR19	rs1451821	rs3733280	**0.002**	**21**	**12**
ZAK	rs4344898	rs1837470	**0.005**	**11**	**22**

B. Hispanics

Gene	SNP 1	SNP 2	p-value	OT	UT
TNFRSF11A	rs4941125	rs7239261	**0.008**	**-**	**11**
	rs7239261	rs8094884	**0.003**	**22**	**11**
	rs7239261	rs2290154	**0.007**	**22**	**12**
TRIAD3	rs852374	rs1468996	**0.008**	**11, 12**	**21,22**
	rs852374	rs2302907	**0.007**	**11,12**	**21,22**
	rs852374	rs13239194	**0.009**	**11**	**21**
	rs852374	rs11771172	**0.003**	**11**	**21**
	rs852374	rs6971918	**0.005**	**11**	**21**
	rs852374	rs10257204	**0.003**	**12**	**-**
	rs852374	rs6967635	**0.009**	**11**	**21**
WDR19	rs1451821	rs9997015	**0.006**	**21**	**11**
	rs3733280	rs1057807	**0.009**	**11,12**	**21**
CARD11	rs1713911	rs7778444	**0.007**	**11,21**	**22**
NFAT2	rs8097537	rs12608349	**0.007**	**21**	**11**
	rs9962479	rs12608349	**0.002**	**22**	**-**
	rs12608349	rs370989	**0.004**	**11**	**12**
	rs4799055	rs370989	**0.005**	**21,11**	**22,12**
	rs7227107	rs370989	**0.002**	**11**	**12**
	rs12608349	rs3894049	**0.001**	**12**	**11**
	rs1660139	rs3894049	**0.002**	**12**	**11**
	rs1667673	rs3894049	**0.006**	**22,12**	**21**
	rs177820	rs3894049	**0.004**	**22,12**	**11,21**
	rs2036892	rs3894049	**0.004**	**22**	**21**
	rs370989	rs3894049	**0.002**	**12**	**21**
	rs4799055	rs3894049	**0.001**	**11,21**	**22,12**
	rs7227107	rs3894049	**0.0004**	**12**	**11**
	rs8090692	rs3894049	**0.002**	**22**	**11**
	rs8097537	rs7227107	**0.007**	**11**	**-**

Table 4.4. Gene interactions

A. NHW

Gene 1	SNP 1	Gene Loc.	Gene 2	SNP 2	Gene Loc.	p-value
CREB1	rs2551640	I1	*HTT*	rs2285086	I2	**0.0002**
GULP1	rs1354905	I8	*TNFSF13B*	rs10508198	I2	**0.0004**
RNF7	rs1980191	U	*TLR10*	rs11096957	E1 N241H	**0.0008**
RNF7	rs6769676	I1	*ATR*	rs4273389	I31	**0.0001**
RNF7	rs6769676	I1	*ATR*	rs13085998	I16	**0.0004**
STAT4	rs1517352	I6	*TLR10*	rs11096957	E1 N241H	**0.0001**
WDR19	rs1057807	D	*UBE2K*	rs302947	I2	**0.0008**
ZAK	rs13032010	I2	*CREB1*	rs10932201	I4	**0.0007**

B. Hispanics

Gene 1	SNP 1	Gene Loc.	Gene 2	SNP 2	Gene Loc.	p-value
RBAK	rs7778444	3'	*TNFRSF11A*	rs8089829	I7	**0.0009**
RBAK	rs7778444	3'	*TNFSF13B*	rs9514828	U	**0.0008**
CERKL	rs1047307	3'	*NFAT2*	rs177820	I10	**0.0009**
CERKL	rs1866888	U	*HTT*	rs362331	I41	**0.0007**
GULP1	rs12474692	I2	*RBAK*	rs7778444	3'	**0.0003**
GULP1	rs7586390	I1	*RBAK*	rs7778444	3'	**0.0006**
RNF7	rs6776205	D	*TRIAD3*	rs13247447	I13	**0.0005**
STAT1	rs12468579	D	*STAT4*	rs925847	I21	**0.0008**
STAT4	rs925847	I21	*TNFRSF11A*	rs8094884	I6	**0.0003**
SUMO1	rs4675272	I1	*TNFSF13B*	rs9520835	I3	**0.0002**
TFDP1	rs7325214	U	*NFAT2*	rs7227107	E9 Syn	**0.0007**
TRL6	rs3821985	E1 Syn	*UBE2K*	rs305827	I4	**0.0005**
ZAK	rs11686011	I14	*STAT4*	rs4341967	I3	**0.0006**
ZAK	rs4972533	I8	*TRIAD3*	rs3779092	I13	**0.0003**

Gene Loc.=gene location, 3'=3'UTR, U=upstream, I=intron, D=downstream, E=exon, Syn=synonymous

and *TNFRSR11A* are both *TNF* family members suggesting that perturbation of this branch of the apoptotic pathway may play role in clubfoot in Hispanics.

Many of the variants identified in single SNP analysis and in the gene-gene interactions were located in potential transcription factor binding sites (Table 4.5). Three prediction programs were used to determine if there were differences in transcription factor binding sites between ancestral and alternate alleles for the variants. Each of the programs predicted that most of the SNPs create or ablate transcription factor binding sites, although the programs did not agree on which sites. Interestingly, two prediction programs agreed on the creation of an H4TF-2 site for rs4941125 in *TNFRSF11A*. Also of note, a retinoic acid receptor binding site is predicted to be lost for rs4675272 in *SUMO1*. This is important because of the role retinoic acid plays in the development and patterning of them limbs (Chapter 1). A STAT5b binding site is predicted to be lost for rs1047307 in *CERKL*, and this transcription factor is a family member of *STAT1* and *STAT4*, which have altered transmission in the clubfoot population of this study. Also, for rs9514828 in TNFSF13B, an NFκB binding site, which plays an integral role in the immune response and apoptotic pathway (Fig. 4.1). However, changes are predicted to occur, and further testing will be required to determine if the alleles are functional.

Table 4.5. Predicted transcription factor binding sites. Comparison of ancestral and alternative alleles of significant SNPs in putative regulatory regions. Ancestral allele defined by the allele present in chimpanzee. Gene Loc.=gene location, 3'=3'UTR, U=upstream, I=intron, D=downstream, E=exon, Syn=synonymous

AFP1=alpha fetoprotein enhancer binding protein 1, AKNA=AT hook transcription factor, AP1/2α=activator protein 2, C/EBP=CCAAT enhancer binding protein, CDC2=Cell division cycle 2, c-myc=myc oncoprotein, CTCF=CCCTC binding factor, E1A-F=E1A enhancer binding protein, EG=epsilon globin, EGFR=epidermal growth factor, GATA1=GATA binding protein 1, GH=growth hormone, GM-CSF=granulocyte/macrophage colony stimulating factor, GR=glucocorticoid receptor, H4TF-2=Histone 4 pHu4A gene, HNF3=hepatocyte nuclear factor 3, HSTF=heat shock transcription factor, ICSBP=interferon consensus sequence binding protein, IGH=immunoglobulan heavy chain, IL4/6=interleukin 4/6, LUN1=Lung, LyF1 =lymphoid transcription factor, MBP=Myelin basic protein, NMP-1=nuclear matrix protein, Oct-1=POU class 2 homeobox 1, Pit 1a=pituitary-specific factor 1, RARα1=retinoic acid receptor alpha, SP1=stimulating protein 1, TBP=TATA binding protein, TCF2α=T cell factor 2 alpha, TFIID=transcription initiation factor D

SNP	Gene	Gene Loc.	Anc Allele	Alt Allele	**Alibaba**		**Patch**		**TESS**	
					Anc Allele	Alt Allele	Anc Allele	Alt Allele	Anc Allele	Alt Allele
rs1047307	*CERKL*	3'	G	A	HSTF	None	STAT5b	None	None	C/EBP
rs1866888	*CERKL*	U	T	C	None	None	Pit 1a	AKNA, IL6, C/EBP, MBP, EG, TFIID, TBP	CDC2, GH	AP1
rs2551640	*CREB1*	I1	G*	A*	None	None	None	CDC2	None	None
rs7586390	*GULP1*	I1	A	G	None	None	AFP1	None	None	CDC2
rs7778444	*RBAK*	3'	G	A	None	Oct-1	None	None	None	None
rs1980191	*RNF7*	U	A	T	None	Pit 1a	GM-CSF	NMP-1, MBP, AKNA, EG, TFIID, TBP	None	GH
rs6769676	*RNF7*	I1	G	T	TBP	None	None	None	None	TCF2α, E1A-F, CDC2
rs6751855	*STAT1*	U	G	A	None	ICSBP, GATA1, C/EBP	GM-CSF	c-myc, HNF3, EG, TFIID, TBP	None	None
rs4675272	*SUMO1*	I1	G	C	None	None	GR, RARα1	None	None	None
rs7325214	*TFDP1*	U	C*	T*	Oct-1	None	None	LyF1, AP2α, LUN1	None	SP1, c-myc
rs13065446	*TFDP2*	U	C	T	None	None	CTCF, EGFR, IGH	Pit 1a	C/EBP	GH
rs4941125	*TNFRSF11A*	I1	A	G	None	C/EBP, SP1	IL4	H4TF-2	None	HINFP
rs7239261	*TNFRSF11A*	I1	C	A	None	None	None	None	None	C/EBP
rs9514828	*TNFSF13B*	U	C	T	None	NF*k*B	None	None	None	None

Discussion

In previous studies, we found an association between mitochondrial mediated apoptotic genes and isolated clubfoot[78,106]. For this reason and because clubfoot chromosomal deletion regions contained many apoptotic genes, 192 flanking and intragenic SNPs in 29 apoptotic genes were interrogated. For the NHW group, the most significant association was found for SNP rs11096957 in *TLR10*, which creates an amino acid substitution. The H241N is on the surface of the protein, and is not predicted to be deleterious to the function of the protein (www.snp3d.org). However, this variant may still be functional if it disrupts splicing enhancers or silencing sites. This SNP may also be in linkage disequilibrium with other variants that may be functional.

In the Hispanic group, the most significant SNP associations were found for *NFAT2* and *TNFRSF11A* in the single SNP analysis. Although these *NFAT2* SNPs were in introns, they were not located in the first or second introns that can harbor transcription factor binding sites. There are multiple transcripts of NFAT2, and isoform D has its start site in exon 3, and all SNPs are located downstream of this start site. Therefore, these particular variants are not likely to be involved in promoter regulation. However, these SNPs could affect splice site regulatory elements or be in LD with other functional variants. rs4941125 in TNFRSF11A is in the first intron and could potentially be located in a transcription factor binding site. Both Patch and TESS prediction programs expect a HINFP (Histone 4 transcription factor) binding site to be created in the individuals who have the alternate allele compared to the ancestral allele (Table 4.5). H4TF-2 is a transcription factor only expressed during DNA synthesis[143]. The creation of this binding

site in *TNFRSF11A* may lead to abnormal production and activation of the TNF receptor. This finding may be particularly important for the Hispanic group.

Interestingly, the two-SNP haplotypes in the NHW did not include any of the SNPs identified in the single SNP analysis. The opposite was found for the Hispanic group, where many significant haplotypes contained SNPs identified in the single analysis such rs3894049 in *NFAT2*. Together these results suggest that there are distinct genetic etiologies for NHW and Hispanics, and different genes are involved in clubfoot for each population. The Hispanic haplotypes confirm the results of the single SNP analysis, suggesting that *NFAT2* and *TRIAD3* are important in clubfoot development within the Hispanic population. Both of these genes act at the cell membrane level of the apoptotic cascade and perturbation of gene expression may have a global effect on the apoptotic pathway and downstream proteins.

Many of the associated SNPs may perturb gene expression, and functional testing is required to determine if the predicted transcription factor binding sites change expression. Interestingly, although there was no overlap of SNPs involved in gene-gene interactions between NHW and Hispanic groups, many of the same genes were involved in the interactions. This suggests that while there is allelic heterogeneity between families, a small portion of the same genes consistently contribute to clubfoot. However, even though the same genes are involved in gene-gene interactions, there were significant differences between the variants involved in the interactions in NHW and Hispanics. This supports the complex model for clubfoot in which perturbation of many genes and environment factors contribute to clubfoot.

Limb formation is a complex process involving cell proliferation and patterning, programmed cell death, and correct positioning of the limb[21,22]. The hind limb begins as a small swelling during the fourth week of gestation and morphogenesis is complete by the end of the eighth week[23]. However, the legs, which develop in the midline in equinus, should move to plantar grade by the twelfth week[24]. Failure of this final movement results in clubfoot. Perturbations in any of the developmental processes may affect the final foot positioning, as would abnormal muscle or tendon development that is universally associated with clubfoot[1,7,11,14]. It is unclear whether the abnormal musculature in clubfoot is a primary or secondary abnormality. It has recently been shown that apoptosis is required for development of the muscle bellies and correct attachment to tendons[22]. Disruption of the apoptotic pathway, whether by increased or decreased activity, could alter morphogenesis and prevent the fetal limb movement required for normal foot development.

Based on our model shown in Fig 4.2, individual genetic variants associated with clubfoot may be necessary but not sufficient to cause the disorder. For the individual, the combination of many variations within different causative genes, e.g. a high risk genetic haplotype (but not necessarily within one gene), could contribute to clubfoot. In addition, those individuals with specific high-risk haplotypes may be more susceptible to environmental exposures. For example, maternal smoking in the general population increases the risk of clubfoot four fold, however maternal smoking in women with a family history of clubfoot have a twenty fold increased risk of clubfoot[58]. When this information is incorporated into the working model of clubfoot in Fig. 4.2, maternal smoking is more likely to contribute to clubfoot if the babies and/or mothers also have

the high-risk haplotype. This model of clubfoot etiology incorporates genetic variants in different pathways including xenobiotic and toxin metabolism, limb and muscle development, and apoptosis which have all recently been associated with clubfoot (Fig. 4.2)[78,106,144]. There may be a threshold of genetic variants needed to cause clubfoot, with greater number of high-risk variants increasing the severity of clubfoot. Our findings fit this model, which is based on the multifactorial model first proposed by Carter et al. in 1965[145]. Determining all of these high-risk haplotypes is the continuing challenge but will improve genetic counseling and provide more precise risk assessments.

This study had a limitation in that the call rates of many of the variants that were interrogated were lower than expected. This is most likely due to the chemistry of the genotyping assay, SNPlex. The significant results reported here should be replicated with a higher fidelity assay, such as TaqMan in the primary data set and then validated in a secondary population such as the recently collected case-control (N=750) clubfoot population.

In summary, this study interrogated apoptotic genes identified in clubfoot deletion regions. We found significantly associated SNPS in genes that are different between ethnic groups yet function in many similar apoptotic pathways. This provides a degree of confidence in our results, which nevertheless require validation. These results add to our growing body of knowledge about etiologic causes of clubfoot.

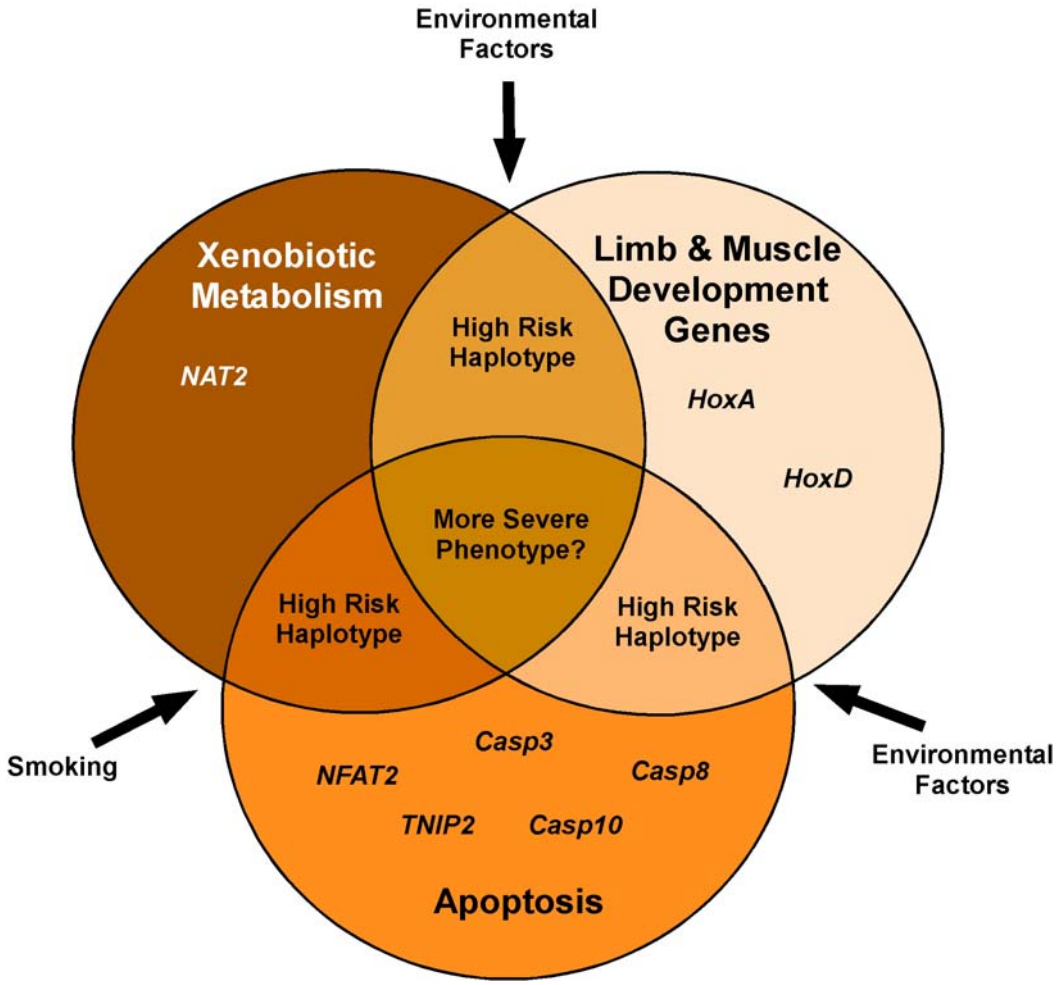

Fig 4.2. Clubfoot Model

Chapter 5: HOX Transcription Factors and Clubfoot

This chapter is a presentation of work from a previously published paper. For more information please refer to: Ester, AR, Weymouth, K, et al. Altered transmission of *HOX* and apoptotic SNPs identify a potential common pathway for clubfoot. American Journal of Medical Genetics. December, 2009. 149A (12): 2745-52.

HOX Genes

The *HOXD* family of genes is a group of candidate genes, as they map to chromosome 2q31-33, a deletion region identified by Brewer et al. to be associated with clubfoot[69,144]. The *HOX* proteins are transcription factors that direct patterning of the axial skeleton and muscle and limb development[31,32]. The *HOX* gene family consists of 39 genes in four paralogous clusters (A, B, C and D) on different chromosomes (7p15.3, 17q21.3, 12q13.3 and 2q31.1, respectively). The *HOX* clusters share common genomic structure (Fig. 1) and are temporally and spatially regulated and expressed during embryogenesis[31,33]. "Expression of the 3' genes of the clusters begins in the superior regions of the embryo and progresses more inferiorly as the more 5' genes in the cluster are expressed in the developing embryo"[146]. For example, *HOXD9*, located towards the 5' end of the cluster, is expressed proximally as the limb bud develops. The further 5' genes are, the later and more distal they are expressed as the limb extends and differentiates (Fig. 5.1)[31].

The 5' *HOXA* genes are expressed in fore- and hind limb muscles of, and are involved in patterning and differentiation of muscles in both embryonic limbs and adult limbs during muscle repair[34]. These 5' genes have also been detected in myoblast and myotube cell lines[34]. *HOXA11* and *HOXA13* have been shown to contribute to cartilage development, and *HOXA13* regulates cell adhesion during the condensation step of skeletogenesis[147]. The synchronized development of muscles, tendons and cartilage is crucial for proper formation of the limb [21], and 5' *HOXA* genes regulate each of these functions[34,147].

Since the *HOXA* and *HOXD* genes play important roles in normal limb development, it would be expected that mutations in these genes might disrupt normal limb development (OMIM). In fact, there are several known mutations in *HOX* genes that cause limb

malformations. The *HOXD10* T956A/M319K mutation causes autosomal dominant congenital vertical talus (CVT)[148,149]. Interestingly, a family with CVT and the T956A/M319K mutation had one affected individual with CVT in one foot and clubfoot in the other foot[148]. Further evidence of *HOXD10* in limb malformations comes from mice in which a deletion of the gene results in stiff hind limbs with occasional abnormal rotation of the hind leg[150,151]. Mutations in several other *HOX* genes also cause mammalian limb abnormalities. Mutations in *HOXD13* cause human synpolydactyly[148,152,153]. Mutations in *HOXA13* in the mouse lead to hypodactyly and the homozygous knock out of this gene is an embryonic lethal[154].

HOXA and *HOXD* genes are important in limb morphogenesis, and disruption of these genes individually gives rise to syndromes associated with limb abnormalities. "While few of these syndromes include clubfoot, it is unknown whether different types of genetic variation may produce a related phenotype such as isolated clubfoot". This phenomenon has been documented in nonsyndromic cleft lip and palate, where an *IRF6* promoter variant may be etiologic in 18% of cases, whereas coding mutations cause van der Woude syndrome[155]. Given the role of *HOX* genes in limb development, they are candidates for playing an etiologic role in isolated clubfoot. This study was undertaken to determine whether genetic variation in the *HOXA* or *HOXD* genes is associated with isolated clubfoot, to further evaluate whether the T956A/M319K *HOXD10* mutation causes clubfoot and to determine if variation associated with clubfoot affects the amount of *HOX* protein produced.

Study Design

Nine *HOXA* and 11 *HOXD* SNPs (Fig. 5.1, Table 5.1) were genotyped in a primary discovery population composed of 304 simplex trios (124 Non-Hispanic white and 180

Hispanic) and 179 multiplex families (105 Non-Hispanic white and 74 Hispanic). An independent validation population consisted of 144 nonHispanic white clubfoot simplex trios.

> To determine whether the T956A/M319K *HOXD10* mutation causes ITEV, 494 ITEV probands (267 nonHispanic white and 227 Hispanic) were genotyped using the TaqMan Genotyping Assay. Unrelated parents of children with sporadic nonsyndromic cleft lip and palate (NSCLP) with no known abnormalities were used for the control population consisting of 595 individuals (380 nonHispanic white and 215 Hispanic) with no anomalies. For positive controls, DNA of two affected individuals from a CVT family with the *HOXD10* T956A/M319K was used. (Ester, 2009)

Results

No T956A/M319K *HOXD10* variants were detected among either the unrelated controls. We next genotyped SNPs in the *HOXA* and *HOXD* gene clusters. All 20 examined SNPs were in HWE in both ethnic groups (data not shown). Comparisons of SNP allele frequencies between nonHispanic whites and Hispanics detected significant differences even after Bonferroni correction ($p<0.001$) in the majority of SNPs (Table 5.1). Therefore, the data were stratified by ethnicity and examined separately. For SNPs showing no frequency differences, the data was combined across ethnicities for APL analysis. Parametric and nonparametric multipoint linkage analysis did not detect linkage in *HOXA* or *HOXD* genes (data not shown).

Figure 5.1. Genetic layout of *HoxA* and *HoxD* gene clusters

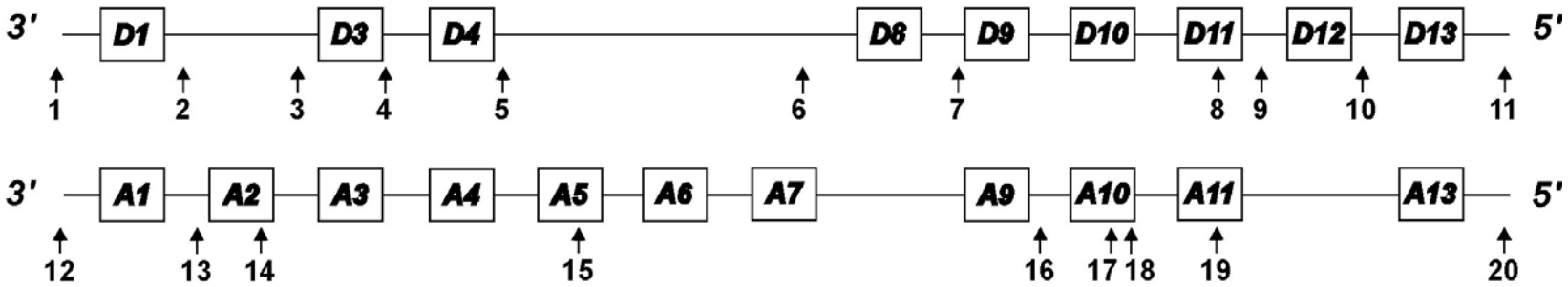

Genes denoted by rectangles, arrows indicate SNP placement

Table 5.1. *HoxA* and *HoxD* SNPs

Gene	dbSNP	Pos.	Alleles	MAF[a]	HCF[b,c]	Location
HoxD	rs6749771	SNP1	A/G	0.391	**0.685**	3' of *HOXD* cluster
	rs1446575	SNP2	C/A	0.385	**0.697**	*HOXD3-HOXD1*
	rs1318778	SNP3	G/C	0.289	**0.145**	3' of *HOXD3*
	rs1542180	SNP4	G/A	0.378	**0.692**	5' of *HOXD3*
	rs1867863	SNP5	C/A	0.341	**0.606**	5' of *HOXD4*
	rs2113563	SNP6	T/C	0.306	0.257	*HOXD8-HOXD4*
	rs2592394	SNP7	C/T	0.305	**0.182**	*HOXD9-HOXD8*
	rs847146	SNP8	G/T	0.354	0.361	*HOXD11* (intronic)
	rs741610	SNP9	G/A	0.316	**0.443**	*HOXD12-HOXD11*
	rs711812	SNP10	T/G	0.325	**0.438**	5' of *HOXD12*
	rs6758117	SNP11	T/C	0.302	**0.594**	5' of *HOXD* cluster
HoxA	rs2462907	SNP12	C/T	0.491	0.461	3' of *HOXA* cluster
	rs6668	SNP13	C/T	0.375	0.413	3' of *HOXA2*
	rs2428431	SNP14	C/G	0.367	0.409	*HOXA2* (intronic)
	rs3757640	SNP15	C/T	0.267	**0.415**	*HOXA5* (intronic)
	rs3801776	SNP16	G/A	0.226	0.315	5' of *HOXA9*
	rs3779456	SNP17	T/C	0.442	0.540	*HOXA10* (intronic)
	rs1859164	SNP18	T/C	0.479	0.386	*HOXA10* (intronic)
	rs6968828	SNP19	G/T	0.462	0.445	*HOXA11* (intronic)
	rs3807598	SNP20	C/G	0.451	**0.305**	5' of *HOXA* cluster

[a] MAF = Minor allele frequency in nonHispanic white population
[b] HCF = Corresponding frequency in Hispanic of nonHispanic white minor allele
[c] HCF signficiantly different from MAF (p<0.001) in bold

APL analysis found significant evidence for association with SNPs in both *HOXA* and *HOXD* in the discovery sample (Table 5.2). The strongest associations in the NHW sample was seen for SNP16, located 5′ to *HOXA9,* in the combined multiplex and simplex group (p=0.004) and when stratified by family history (Table 5.2). Additionally, a strong association for SNP1 in *HOXD* was found in the NHW simplex families (p=0.009). In the Hispanic sample, the strongest association was with SNP14 (p=0.008) in the *HOXA* gene cluster, with no evidence for association found with SNPs in *HOXD*. Interestingly, the combined ethnicity data for SNP14 was still significant (Table 5.2).

Table 5.2. Results of APL analysis of *HoxA* and *HoxD* in discovery population[a,b]

	dbSNP	Pos.	All			Multiplex		Simplex	
			All Ethn.	NHW	Hisp.	NHW	Hisp.	NHW	Hisp.
HOXD	rs6749771	SNP1	—[d]	**0.015**	0.899	0.505	0.699	**0.009**	0.754
	rs1446575	SNP2	—	**0.021**	0.334	**0.026**	0.440	0.224	0.134
HOXA	rs6668	SNP13	0.101	0.802	**0.025**	0.968	0.119	0.872	0.073
	rs2428431	SNP14	**0.006**	0.345	**0.008**	0.158	0.081	0.876	0.043
	rs3801776	SNP16	—	**0.004**	0.143	**0.032**	0.114	**0.046**	0.449
	rs3779456	SNP17	—	0.179	0.845	**0.042**	0.459	0.980	0.702

[a]SNPs with p<0.05 shown in bold

Significantly overtransmitted haplotypes for *HOXA* and *HOXD* were seen in NHW and *HOXA* in Hispanics (Table 5.3 and Appendix C Tables C5 - C7). "These haplotypes primarily involve the SNPs identified in the single SNP association analyses". Among NHW the most significant haplotype for *HOXA* involves SNP16 and SNP18, which are in the 5' region of the *HOXA* cluster (Table 5.3).

Table 5.3. Overtransmitted *HoxA and HoxD* haplotypes in discovery sample[a,b]

	Haplotype	p-value
	NonHispanic White	
HOXD	SNP1/SNP2	0.007
	SNP1/SNP6	0.007
	SNP1/SNP7	0.006
HOXxA	SNP16/SNP18	0.004
	Hispanic	
HOXA	SNP14/SNP15	0.009
	SNP14/SNP19	0.006
	SNP16/SNP12	0.006

[a]Haplotypes with p<0.01 shown
[b]p-values uncorrected for multiple testing

Both of these genes are expressed during limb development. In Hispanics, haplotypes involving SNP14 or SNP16 (*HOXA)* were also overtransmitted ($0.006 \leq p \leq 0.009$; Table 5.3 and Appendix C, Table C5).

There was no evidence for gene-gene interactions between *HOXA* and HOX*D* in the NHW discovery population. However for the Hispanic population, there were interactions between *HOXA* and *HOXD* for SNPs 11/14 and 5/16 (p=0.006 and p=0.007) (data not shown).

The validation sample provided moderate evidence for association with SNP16 in *HOXA* (p=0.028). Analysis of 2-SNP haplotypes in the validation population identified seven *HOXA* haplotypes with altered transmission, although these haplotypes were not identified in the discovery sample (Table 5.3 and Appendix C, Table C8). "The most significant haplotypes in the validation population were SNP17/20 (p=0.007) and SNP18/20 (p=0.0003)".

There were no interactions between SNPs in *HOXA* and HOX*D* in the validation sample (data not shown). However, multiple interactions between *HOXA* and *HOXD* SNPs were identified in the validation sample.

Previously variants in mitochondrial mediated apoptotic genes were found to be associated with clubfoot (Chapter 3), and we evaluated our data from both studies to look for potential gene-gene interactions in the discovery sample[106]. The results are presented in Table 5.4 and Appendix C, Tables C12 and C13. While multiple interactions between *HOX* genes and mitochondrial mediated genes in both ethnicities, none of these interactions with $p<0.01$ were the same in both ethnicities. There was, however, strong evidence for

Table 5.4. Gene-gene interactions for *Hox*, *IGFBP3* and mitochondrial-mediated apoptotic variants[a,b]

A. nonHispanic White

Gene 1	SNP 1	Gene 2	SNP 2	p-value
CASP3	rs1049216	***HOXD***	rs6749771 (SNP1)	0.002
CASP3	rs1405937		rs6749771 (SNP1)	0.005
CASP3	rs1049253		rs2592394 (SNP7)	0.001
CASP3	rs1049216		rs2592394 (SNP7)	0.008
BID	rs8919		rs6758117 (SNP11)	0.007
CASP3	rs2720378	***HOXA***	rs6668 (SNP13)	0.004
CASP3	rs1049216		rs1859164 (SNP18)	0.004
CASP3	rs2720378		rs1859164 (SNP18)	0.004
CASP10	rs3900115		rs3779456 (SNP17)	0.008
BID	rs181405		rs3779456 (SNP17)	0.001
BID	rs181405		rs1859164 (SNP18)	0.005

B. Hispanic population

Gene 1	SNP 1	Gene 2	SNP 2	p-value
CASP3	rs4647602	***HOXD***	rs1318778 (SNP3)	0.0005
CASP3	rs4647602		rs2113563 (SNP6)	0.009
CASP3	rs2696057		rs741610 (SNP9)	0.008
BCL-2	rs1564483	***HOXA***	rs3801776 (SNP16)	0.002
CASP9	rs4233533		rs3779456 (SNP17)	0.001
APAF-1	rs1866477		rs6968828 (SNP19)	0.009

[a]only $p<0.01$ shown

[b]p-values uncorrected for multiple testing

interaction between SNPs in *HOXA* and *HOXD* and SNPs in both *Casp3* and *Bid* in nonHispanic whites (Table 5.4), and in Hispanics, the strongest interactions were between SNPs in *Casp3* and *HOXD* (Table 5.4).

Table 5.5. Predicted transcription factor binding sites for *HoxA* SNPs in discovery population[a]

	Alibaba2		Patch		TESS	
	Anc.	Alt.	Anc.	Alt.	Anc.	Alt.
rs2428431 (SNP14)	MIG1, Sp1	None	Sp1, AML1	NF-E	TCF2α, MIG1, AML1	NF-E, RAF
rs3801776 (SNP16)	None	1-Oct	None	None	None	RAF

[a]Only SNPs with p<0.01 in regulatory regions shown

"Because the *HOX* clusters are controlled by many different regulatory factors, SNPs in the intergenic regions of the clusters may be in enhancer or suppressor regions". Therefore, each of the overtransmitted SNPs in these regions was evaluated using three transcription factor binding site prediction algorithms. SNP14 was predicted to change ancestral binding sites by all three programs, but the binding factors differed (Table 5.5). The ancestral allele of SNP16 was not identified as a potential binding site by any of the programs, while the alternative SNP generated a potential binding site by two of the programs (Table 5.5). SNP1 was not predicted to change any binding sites (data not shown).

SNPs within promoter regions have been shown to alter gene expression by affecting transcription factor binding sites[156]. SNP16 is located in the basal promoter region of *HOXA9*. The sequence surrounding SNP16 was inputted into three different transcription factor binding site prediction programs, Alibaba2, Patch and Transcription Element Search Software (TESS)[93-95]. The results show a loss of a transcription factor binding site, although

the predicted site varies between programs. This suggests that the expression pattern of *HOXA9* may be affected by the presence of alternative alleles at SNP16.

Discussion

This study assessed the role of *HOX* genes in clubfoot. The T956A/M319K *HOXD10* mutation that has been shown to cause CVT in individuals with isolated clubfoot[148] was tested in the discovery population. This mutation was not found in cases or controls. This result confirms the previous finding of Dobbs et al. and provides further evidence that this mutation does not cause isolated clubfoot[157].

Next, we assessed variants in the *HOXA* and *HOXD* gene clusters for an association with clubfoot. SNP1, which is 3' of the *HOXD* cluster, had altered transmission but is not expected to affect *HOXD genes* expressed in the limbs[31,33]. SNP14 and SNP16, both in the *HOXA* gene cluster, were significantly overtransmitted. "SNP14 is in intron 1 of *HOXA2* and changes predicted DNA binding sites [Table 5.5]. *HOXA2* is not expressed in the limb and is not likely to contribute to clubfoot, but we cannot exclude the possibility that these SNPs may regulate expression levels of other upstream 5' *HOXD* genes". SNP16, is located in the *HOXA9* basal promoter region, and showed altered transmission in nonHispanic whites in both the discovery and validation groups. Pairwise haplotypes involving SNP16 were overtransmitted and this SNP had gene-gene interactions. "*HOXA9* is expressed in both the proximal and distal limb and the variant allele is predicted to introduce novel DNA binding sites [Table 5.5]". This change may alter *HOXA9* expression levels and affect limb or muscle development.

Perturbations in limb developmental processes may affect the final positioning of the foot, as would abnormal muscle or tendon development that is associated with clubfoot

[1,7,11,14]. We found that genetic variants in *HOXD* and *HOXA* are associated with clubfoot, and these variants may perturb gene expression and contribute to clubfoot. Additionally, we found variation in apoptotic genes interacts with variants in *HOXD* and *HOXA* genes, and these interactions are associated with clubfoot[106]. These results are supported by work indicating that apoptosis is important for muscle morphogenesis[22].

> Apoptosis is associated with interdigital removal of excess skin; however, it has more recently been shown to play a far more subtle role in later limb development shaping muscle and tendons. Specifically, *Casp3* has been shown to modulate apoptosis in later muscle and tendon development. While we did not find a strong association with *Casp3* and clubfoot alone, we did find evidence for interactions between *Casp3* and variants in *HOX* genes. This implies that individual variation in *Casp3* may not be sufficient to cause clubfoot but that the interaction with genes in other limb and muscle developmental pathways, such as *HOXA* and *HOXD,* are necessary in order to disrupt the developmental process. (Ester, 2009)

The interactions seen between the mitochondrial mediated programmed cell death genes and *HOXA* and *HOXD* genes suggest that there may be a common pathway or regulatory element controlling these two pathways. Perturbations of this common regulatory pathway may also lead to clubfoot. Apoptosis in hind limb myocytes helps shape developing muscles and coordinates muscle-tendon connections[28]. This process is regulated by retinoic acid, which has also been shown to control *HOX* genes[22,158].

> The goal of these studies was to identify high-risk haplotypes that would contribute to clubfoot. The first step in this process is to identify genetic variants that are associated with clubfoot and to determine whether they interact. In this study we found evidence for an association between a basal promoter SNP in *HOXA9* and clubfoot, and provide further evidence that mitochondrial mediated apoptotic genes play a role in clubfoot. (Ester, 2009)

Chapter 6. Conclusions and Future Studies

Conclusions

Clubfoot is a common birth defect occurring in more than 135,000 live births worldwide each year[39,159,160]. Treatment modalities such as casting and surgery have improved the long term outcome but residual foot and leg abnormalities often persist[42,82,83]. Little is known about how clubfoot develops, and knowledge gained by studying abnormalities of foot development, such as clubfoot, may help identify the genes that are involved with the final stages of limb development and rotation. The information can be translated into improved genetic counseling. The overall goal of this project was to define genes that contribute to clubfoot to provide a better understanding about how this disorder develops.

These studies were undertaken to identify genetic variation that contributes to clubfoot. A previous study interrogated a clubfoot chromosomal deletion region and found that apoptotic genes, *Casp8* and *Casp10,* were associated with clubfoot[78]. These studies follow from this previous work and had three objectives: 1) to determine if genes which act downstream of Casp8 and Casp10 in the mitochondrial mediated pathway are associated with clubfoot, 2) to identify genes involved in the apoptotic pathway within clubfoot deletion regions and test for association with clubfoot, and 3) to interrogate other candidate genes in the clubfoot deletion regions such as those involved in patterning of the limbs.

Candidate genes were selected from processes known to participate in limb development, particularly in muscle development, including apoptotic and HOX genes. Many of these candidate genes were located in chromosomal deletion regions associated with clubfoot[69]. One SNP from each mitochondrial mediated apoptotic gene was moderately associated with clubfoot[106]. This confirmed the previous study in which *Casp8* and *Casp10* were associated with clubfoot.

Because the role of a subset of apoptotic genes in clubfoot development was confirmed, genotyping was expanded to all genes in the clubfoot deletion regions known to be involved in the apoptotic pathway. Apoptotic genes were excellent candidate genes because they were the only class of genes found in all six clubfoot deletion regions. 192 SNPs across 29 genes were assessed for association with clubfoot. Of note, there was no overlap in significant SNPs in both NHW and Hispanic samples, although several gene family members were positive in each ethnicity. For the NHW sample, *TNIP2* was the most significant gene and *NFAT2* was most significant in Hispanics. Haplotype analysis confirmed these results. Gene-gene interactions were detected, and although the SNPs from the single SNP analysis weren't involved in these interactions, some of the same genes were involved. These results suggest that there is heterogeneity between individual clubfoot families, and when the same genes are involved in the disease process, there is also allelic heterogeneity between the genetic variants.

There are other candidate genes within the clubfoot deletion regions in addition to the apoptotic genes that were interrogated, including the *HOXD* cluster, which is a family of transcription factors involved in patterning of the limbs. *HOXA* and *HOXD* have redundant function in the limbs, and so variants in the *HOXA* and *HOXD* gene clusters were tested for an association with clubfoot. SNP14 and SNP16, both in the *HOXA* gene cluster, were both significantly overtransmitted. "SNP14 is in intron 1 of *HOXA2* and changes predicted DNA binding sites. SNP16, is located in the *HOXA9* basal promoter region, and showed altered transmission in nonHispanic whites in both the discovery and validation groups". This change may alter *HOXA9* expression levels and possibly could perturb limb or muscle development.

Taken together, these results support our working model for clubfoot (Fig. 4.2). Individual variants in candidate genes may be necessary but not sufficient until combined with other clubfoot predisposing variants. Clubfoot is a malformation of the foot, and although the variants in these genes are found ubiquitously in all cell type, perturbation of gene expression may be limited to particular regions of the body, such as the lower limb. For example, a slight perturbation of expression in an apoptotic gene may have no global phenotype but when combined with another variant that is only be expressed in the limb, such as a *HOXD* polymorphism, clubfoot may result.

The information from these studies may be used to improve risk assessment and develop population-based genetic screening programs for clubfoot. Additionally, this information may translate into improved genetic counseling for clubfoot families. Determination of the genetic variation that contributes to clubfoot may allow for advances in detection and treatment methods that will diminish the medical and psychosocial impact that clubfoot has on the child and their families.

Future Studies

The mitochondrial mediated apoptotic gene SNPs were genotyped on a smaller sample set than the *HOX* and clubfoot deletion region apoptotic genes because of the continuing collection of samples from new clubfoot families. Currently these SNPs are being evaluated on the expanded sample set. Once completed, gene-gene interactions will be run between the mitochondrial mediated and the clubfoot deletion region apoptotic genes.

The SNPlex assay for the clubfoot deletion region apoptotic genes produced low call rates, and so another assay with higher fidelity, such as TaqMan, will need to be used to

validate the results presented in Chapter 4. In addition, the most positive results will need to be assessed in our case-control validation population.

Because maternal smoking has consistently been associated with clubfoot, smoking metabolism genes are currently being interrogated and significant findings will be submitted for gene-gene interaction analysis. The outcome may provide information about the role of smoking metabolism and apoptosis genes together in clubfoot.

References

1 Loren G, J, Karpinski N, C, Mubarak S, J: Clinical implications of clubfoot histopathology. *J Pediatr Orthop* 1998; **18**: 765-769.

2 Bohm M: Embryologic origin of clubfoot. *Journal of Bone & Joint Surgery* 1929; **11**: 229-259.

3 Irani RN, ; Sherman MS: The Patological Anatomy of Club Foot. *The Journal of Bone and Joint Surgery* 1963; **45**: 45-52.

4 Isaacs H, Handelsman J, E, Badenhorst M, Pickering A: The muscles in club foot--a histological histochemical and electron microscopic study. *J Bone Joint Surg Br* 1977; **59-B**: 465-472.

5 Zierath J, R, Hawley J, A: Skeletal muscle fiber type: influence on contractile and metabolic properties. *PLoS Biol* 2004; **2**: e348.

6 Berne RL, MN: Principles of Physiology. St. Louis, Mosyb Inc., 2000.

7 Fukuhara K, Schollmeier G, Uhthoff H, K: The pathogenesis of club foot. A histomorphometric and immunohistochemical study of fetuses. *J Bone Joint Surg Br* 1994; **76**: 450-457.

8 Germiller J, A, Lerner A, L, Pacifico R, J, Loder R, T, Hensinger R, N: Muscle and tendon size relationships in a paralyzed chick embryo model of clubfoot. *Journal of Pediatric Orthopedics* 1998; **18**: 314-318.

9 Omeroglu S, Peker T, Omeroglu H, Gulekon N, Mungan T, Danisman N: Intrauterine structure of foot muscles in talipes equinovarus due to high-level myelomeningocele:

a light microscopic study in fetal cadavers. *Journal of Pediatric Orthopaedics, Part B* 2004; **13**: 263-267.

10 Herceg M, B, Weiner D, S, Agamanolis D, P, Hawk D: Histologic and histochemical analysis of muscle specimens in idiopathic talipes equinovarus. *J Pediatr Orthop* 2006; **26**: 91-93.

11 Windisch G, Anderhuber F, Haldi-Brandle V, Exner G, U: Additional muscle in idiopathic club foot. *Eur J Pediatr Surg* 2006; **16**: 294-296.

12 Gupta P, Singla R, Gupta R, Jindal R, Bahadur R: Accessory soleus muscle in clubfoot deformity: a report in four feet. *J Pediatr Orthop B* 2007; **16**: 106-109.

13 Karapinar L, Kaya A, Altay T, Ozturk H, Surenkok F: Congenital clubfoot associated with an accessory soleus muscle. *J Am Podiatr Med Assoc* 2008; **98**: 408-413.

14 Dobbs M, B, Walton T, Gordon J, E, Schoenecker P, L, Gurnett C, A: Flexor digitorum accessorius longus muscle is associated with familial idiopathic clubfoot. *J Pediatr Orthop* 2005; **25**: 357-359.

15 Kubota H, Noguchi Y, Urabe K, Itokawa T, Nakashima Y, Iwamoto Y: Flexor digitorum longus accessorius in the club foot of an infant with Nager syndrome. *Arch Orthop Trauma Surg* 2001; **121**: 95-96.

16 Porter R, W: An anomalous muscle in children with congenital talipes. *Clin Anat* 1996; **9**: 25-27.

17 Siapkara A, Duncan R: Congenital talipes equinovarus: a review of current management. *J Bone Joint Surg Br* 2007; **89**: 995-1000.

18 Hulme A: The management of congenital talipes equinovarus. *Early Hum Dev* 2005; **81**: 797-802.

19 Alvarez C, , Tredwell S, , Keenan S, , Beauchamp R, , De Vera M, , Choit R, , Sawatzky B: Treatment of Idiopathic Clubfoot Utilizing Botulinum A Toxin: A New Method and Its Short Term Outcomes. *J Pediatr Ortho* 2004.

20 Delgado M, R, Wilson H, Johnston C, Richards S, Karol L: A preliminary report of the use of botulinum toxin type A in infants with clubfoot: four case studies. *J Pediatr Orthop* 2000; **20**: 533-538.

21 Kardon G: Muscle and tendon morphogenesis in the avian hind limb. *Development* 1998; **125**: 4019-4032.

22 Rodriguez-Guzman M, Montero J, A, Santesteban E, Ganan Y, Macias D, Hurle J, M: Tendon-muscle crosstalk controls muscle bellies morphogenesis, which is mediated by cell death and retinoic acid signaling. *Dev Biol* 2007; **302**: 267-280.

23 O'Rahilly R, Mèuller F: Human embryology & teratology. New York, Wiley-Liss, 2001.

24 Larsen WJ: Human embryology. New York, Churchill Livingstone, 1997.

25 Yang Y: Growth and patterning in the limb: signaling gradients make the decision. *Sci Signal* 2009; **2**: pe3.

26 Fernandez-Teran M, Ros M, A: The Apical Ectodermal Ridge: morphological aspects and signaling pathways. *Int J Dev Biol* 2008; **52**: 857-871.

27 Lee G, S, Kochhar D, M, Collins M, D: Retinoid-induced limb malformations. *Curr Pharm Des* 2004; **10**: 2657-2699.

28 Lewandoski M, Mackem S: Limb development: the rise and fall of retinoic acid. *Curr Biol* 2009; **19**: R558-561.

29 Motoyama J: Essential roles of Gli3 and sonic hedgehog in pattern formation and developmental anomalies caused by their dysfunction. *Congenit Anom (Kyoto)* 2006; **46**: 123-128.

30 Robert B, Lallemand Y: Anteroposterior patterning in the limb and digit specification: contribution of mouse genetics. *Dev Dyn* 2006; **235**: 2337-2352.

31 McGinnis W, Krumlauf R: Homeobox genes and axial patterning. *Cell* 1992; **68**: 283-302.

32 Mark M, Rijli FM, Chambon P: Homeobox genes in embryogenesis and pathogenesis. *Pediatr Res* 1997; **42**: 421-429.

33 Mark M, Rijli F, M, Chambon P: Homeobox genes in embryogenesis and pathogenesis. *Pediatr Res* 1997; **42**: 421-429.

34 Houghton L, Rosenthal N: Regulation of a muscle-specific transgene by persistent expression of Hox genes in postnatal murine limb muscle. *Dev Dyn* 1999; **216**: 385-397.

35 Zakany J, Duboule D: The role of Hox genes during vertebrate limb development. *Curr Opin Genet Dev* 2007; **17**: 359-366.

36 Morriss-Kay GM, Sokolova N: Embryonic development and pattern formation. *Faseb J* 1996; **10**: 961-968.

37 Zuzarte-Luis V, Hurle J, M: Programmed cell death in the embryonic vertebrate limb. *Semin Cell Dev Biol* 2005; **16**: 261-269.

38 Lochmiller C, Johnston D, Scott A, Risman M, Hecht J, T: Genetic epidemiology study of idiopathic talipes equinovarus. *Am J Med Genet* 1998; **79**: 90-96.

39 Beals RK: Club foot in the Maori: a genetic study of 50 kindreds. *N Z Med J* 1978; **88**: 144-146.

40 Chung C, S, Nemechek R, W, Larsen I, J, Ching G, H: Genetic and epidemiological studies of clubfoot in Hawaii. General and medical considerations. *Hum Hered* 1969; **19**: 321-342.

41 Moorthi RN, Hashmi SS, Langois P, Canfield M, Waller DK, Hecht JT: Idiopathic talipes equinovarus (ITEV) (clubfeet) in Texas. *Am J Med Genet A* 2005; **132**: 376-380.

42 Dietz F: The genetics of idiopathic clubfoot. *Clin Orthop Relat Res* 2002: 39-48.

43 Yang H, Y, Chung C, S, Nemechek R, W: A genetic analysis of clubfoot in Hawaii. *Genet Epidemiol* 1987; **4**: 299-306.

44 Wang J, H, Palmer R, M, Chung C, S: The role of major gene in clubfoot. *Am J Hum Genet* 1988; **42**: 772-776.

45 Morton N, E, MacLean C, J: Analysis of family resemblance. 3. Complex segregation of quantitative traits. *Am J Hum Genet* 1974; **26**: 489-503.

46 Rebbeck T, R, Dietz F, R, Murray J, C, Buetow K, H: A single-gene explanation for the probability of having idiopathic talipes equinovarus. *Am J Hum Genet* 1993; **53**: 1051-1063.

47 Kruse L, M, Dobbs M, B, Gurnett C, A: Polygenic threshold model with sex dimorphism in clubfoot inheritance: the Carter effect. *J Bone Joint Surg Am* 2008; **90**: 2688-2694.

48 Wang JH, Palmer RM, Chung CS: The role of major gene in clubfoot. *Am J Hum Genet* 1988; **42**: 772-776.

49 Morton NE, MacLean CJ: Analysis of family resemblance. 3. Complex segregation of quantitative traits. *Am J Hum Genet* 1974; **26**: 489-503.

50 de Andrade M, Barnholtz JS, Amos CI, Lochmiller C, Scott A, Risman M, Hecht JT: Segregation analysis of idiopathic talipes equinovarus in a Texan population. *Am J Med Genet* 1998; **79**: 97-102.

51 Yang HY, Chung CS, Nemechek RW: A genetic analysis of clubfoot in Hawaii. *Genet Epidemiol* 1987; **4**: 299-306.

52 Ching GH, Chung CS, Nemechek RW: Genetic and epidemiological studies of clubfoot in Hawaii: ascertainment and incidence. *Am J Hum Genet* 1969; **21**: 566-580.

53 Pryor G, A, Villar R, N, Ronen A, Scott P, M: Seasonal variation in the incidence of congenital talipes equinovarus. *J Bone Joint Surg Br* 1991; **73**: 632-634.

54 Barker S, L, Macnicol M, F: Seasonal distribution of idiopathic congenital talipes equinovarus in Scotland. *J Pediatr Orthop B* 2002; **11**: 129-133.

55 Wallander H, Hovelius L, Michaelsson K: Incidence of congenital clubfoot in Sweden. *Acta Orthop* 2006; **77**: 847-852.

56 Loder R, T, Drvaric D, M, Carney B, Hamby Z, Barker S, Chesney D, Maffulli N: Lack of seasonal variation in idiopathic talipes equinovarus. *J Bone Joint Surg Am* 2006; **88**: 496-502.

57 Dickinson K, C, Meyer R, E, Kotch J: Maternal smoking and the risk for clubfoot in infants. *Birth Defects Res A Clin Mol Teratol* 2008; **82**: 86-91.

58 Skelly A, C, Holt V, L, Mosca V, S, Alderman B, W: Talipes equinovarus and maternal smoking: a population-based case-control study in Washington state. *Teratology* 2002; **66**: 91-100.

59 Honein M, A, Paulozzi L, J, Moore C, A: Family history, maternal smoking, and clubfoot: an indication of a gene-environment interaction. *Am J Epidemiol* 2000; **152**: 658-665.

60 Strach EH: Club-foot through the centuries. *Prog Pediatr Surg* 1986; **20**: 215-237.

61 Engell V, Damborg F, Andersen M, Kyvik K, O, Thomsen K: Club foot: a twin study. *J Bone Joint Surg Br* 2006; **88**: 374-376.

62 Idelberger K, : Die Ergebnisseder Zwillingsforschung beim angeborenen Klumpfu. *Verh Dtsch Orthop Ges* 1939; **33**: 272-276.

63 Barker S, Chesney D, Miedzybrodzka Z, Maffulli N: Genetics and epidemiology of idiopathic congenital talipes equinovarus. *J Pediatr Orthop* 2003; **23**: 265-272.

64 Wynne-Davies R: Family studies and the cause of congenital clubfoot. *J Bone Joint Surg Am* 1964; **46**: 445-452.

65 Moorthi R, N, Hashmi S, S, Langois P, Canfield M, Waller D, K, Hecht J, T: Idiopathic talipes equinovarus (ITEV) (clubfeet) in Texas. *Am J Med Genet A* 2005; **132**: 376-380.

66 Palmer R, M, Conneally P, M, Yu P, L: Studies of the inheritance of idiopathic talipes equinovarus. *Orthop Clin North Am* 1974; **5**: 99-108.

67 de Andrade M, Barnholtz J, S, Amos C, I, Lochmiller C, Scott A, Risman M, Hecht J, T: Segregation analysis of idiopathic talipes equinovarus in a Texan population. *Am J Med Genet* 1998; **79**: 97-102.

68 Collins A: Approaches to the identification of susceptibility genes. *Parasite Immunol* 2009; **31**: 225-233.

69 Brewer C, Holloway S, Zawalnyski P, Schinzel A, FitzPatrick D: A chromosomal deletion map of human malformations. *Am J Hum Genet* 1998; **63**: 1153-1159.

70 Brewer C, Holloway S, Zawalnyski P, Schinzel A, FitzPatrick D: A chromosomal duplication map of malformations: regions of suspected haplo- and triplolethality--and tolerance of segmental aneuploidy--in humans. *Am J Hum Genet* 1999; **64**: 1702-1708.

71 Dietz F, R, Cole W, G, Tosi L, L, Carroll N, C, Werner R, D, Comstock D, Murray J, C: A search for the gene(s) predisposing to idiopathic clubfoot. *Clin Genet* 2005; **67**: 361-362.

72 Shyy W, Dietz F, Dobbs M, B, Sheffield V, C, Morcuende J, A: Evaluation of CAND2 and WNT7a as candidate genes for congenital idiopathic clubfoot. *Clin Orthop Relat Res* 2009; **467**: 1201-1205.

73 Pinorini-Godly M, T, Myers S, R: HPLC and GC/MS determination of 4-aminobiphenyl haemoglobin adducts in fetuses exposed to the tobacco smoke carcinogen in utero. *Toxicology* 1996; **107**: 209-217.

74 Brockton N, Little J, Sharp L, Cotton S, C: N-acetyltransferase polymorphisms and colorectal cancer: a HuGE review. *Am J Epidemiol* 2000; **151**: 846-861.

75 Hecht J, T, Ester A, Scott A, Wise C, A, Iovannisci D, M, Lammer E, J, Langlois P, H, Blanton S, H: NAT2 variation and idiopathic talipes equinovarus (clubfoot). *Am J Med Genet A* 2007; **143**: 2285-2291.

76 Gurnett C, A, Alaee F, Desruisseau D, Boehm S, Dobbs M, B: Skeletal muscle contractile gene (TNNT3, MYH3, TPM2) mutations not found in vertical talus or clubfoot. *Clin Orthop Relat Res* 2009; **467**: 1195-1200.

77 Gurnett C, A, Alaee F, Kruse L, M, Desruisseau D, M, Hecht J, T, Wise C, A, Bowcock A, M, Dobbs M, B: Asymmetric lower-limb malformations in individuals with homeobox PITX1 gene mutation. *Am J Hum Genet* 2008; **83**: 616-622.

78 Heck A, L, Bray M, S, Scott A, Blanton S, H, Hecht J, T: Variation in CASP10 gene is associated with idiopathic talipes equinovarus. *J Pediatr Orthop* 2005; **25**: 598-602.

79 Li Z, G, Ji H, Fu W, N, Zhao Y, Y, Jin C, L, Ji S, J, Sun K, L: [Proteomic analysis of the ankle joint bone, ankle joint tissue and spinal cord of clubfoot-like deformity in rat fetuses]. *Zhonghua Yi Xue Yi Chuan Xue Za Zhi* 2007; **24**: 52-58.

80 Guo L, Zhao Y, Y, Ji S, J, Sun K, L, Dong L, Y: Effect of the regulationof IGFs system components in retinoic-acid induced congenital clubfoot. *Acta Genetica Sinica* 2004; **31**: 766-770.

81 Delgado-Baeza E, Santos-Alvarez I, Martos-Rodriguez A: Retinoic acid-induced clubfoot-like deformity: pathoanatomy in rat fetuses. *J Pediatr Orthop B* 1999; **8**: 12-18.

82 Ponseti IV, Campos J: Observations on the pathogenesis and treatment of congenital clubfoot. *Clin Orthop* 1972; **84**: 50-60.

83 Rodgveller B: Talipes Equinovarus. *Clin Podiatry* 1984; **1**: 477-499.

84 Barrett J, C, Fry B, Maller J, Daly M, J: Haploview: analysis and visualization of LD and haplotype maps. *Bioinformatics* 2005; **21**: 263-265.

85 Abecasis G, R, , Cookson W, O: GOLD--graphical overview of linkage disequilibrium. *Bioinformatics* 2000; **16**: 182-183.

86 Abecasis G, R, Cherny S, S, Cookson W, O, Cardon L, R: Merlin--rapid analysis of dense genetic maps using sparse gene flow trees. *Nat Genet* 2002; **30**: 97-101.

87 Abecasis GR, Cookson W, O.: GOLD--graphical overview of linkage disequilibrium. *Bioinformatics* 2000; **16**: 182-183.

88 Martin ER, Monks SA, Warren LL, Kaplan NL: A test for linkage and association in general pedigrees: The pedigree disequilibrium test. *Am J Hum Genet* 2000; **67**: 146-154.

89 Horvath S, Xu X, Laird NM: The family based asscoation test method: strategies for studying general genotype-phenotype associations. *Eur J Hum Genet* 2001; **9**: 301-306.

90 Horvath S, , Xu X, , Laird N, M: The family based asscoation test method: strategies for studying general genotype-phenotype associations. *Eur J Hum Genet* 2001; **9**: 301-306.

91 Chung R, H, Hauser E, R, Martin E, R: The APL test: extension to general nuclear families and haplotypes and examination of its robustness. *Hum Hered* 2006; **61**: 189-199.

92 Martin E, R, Ritchie M, D, Hahn L, Kang S, Moore J, H: A novel method to identify gene-gene effects in nuclear families: the MDR-PDT. *Genet Epidemiol* 2006; **30**: 111-123.

93 Grabe N: AliBaba2: context specific identification of transcription factor binding sites. *In Silico Biol* 2002; **2**: S1-15.

94 Matys V, Kel-Margoulis O, V, Fricke E, Liebich I, Land S, Barre-Dirrie A, Reuter I, Chekmenev D, Krull M, Hornischer K, Voss N, Stegmaier P, Lewicki-Potapov B, Saxel H, Kel A, E, Wingender E: TRANSFAC and its module TRANSCompel: transcriptional gene regulation in eukaryotes. *Nucleic Acids Research* 2006; **34**: D108-110.

95 Schug J: Using TESS to Predict Transcription Factor Binding Sites in DNA Sequence; in: Baxevanis AD (ed): Current Protocols in Bioinformatics, John Wiley and Sons, Inc., 2003, pp 2.6.1-2.6.15.

96 Adams V, Gielen S, Hambrecht R, Schuler G: Apoptosis in skeletal muscle. *Front Biosci* 2001; **6**: D1-D11.

97 Kurokawa M, Kornbluth S: Caspases and kinases in a death grip. *Cell* 2009; **138**: 838-854.

98 Kiechle F, L, Zhang X: Apoptosis: biochemical aspects and clinical implications. *Clin Chim Acta* 2002; **326**: 27-45.

99 Bhardwaj A, Aggarwal B, B: Receptor-mediated choreography of life and death. *J Clin Immunol* 2003; **23**: 317-332.

100 Slee E, A, Harte M, T, Kluck R, M, Wolf B, B, Casiano C, A, Newmeyer D, D, Wang H, G, Reed J, C, Nicholson D, W, Alnemri E, S, Green D, R, Martin S, J: Ordering the cytochrome c-initiated caspase cascade: hierarchical activation of caspases-2, -3, -6, -7, -8, and -10 in a caspase-9-dependent manner. *J Cell Biol* 1999; **144**: 281-292.

101 Billen L, P, Shamas-Din A, Andrews D, W: Bid: a Bax-like BH3 protein. *Oncogene* 2008; **27 Suppl 1**: S93-104.

102 Szegezdi E, Macdonald D, C, Ni Chonghaile T, Gupta S, Samali A: Bcl-2 family on guard at the ER. *Am J Physiol Cell Physiol* 2009; **296**: C941-953.

103 Wong W, W, Puthalakath H: Bcl-2 family proteins: the sentinels of the mitochondrial apoptosis pathway. *IUBMB Life* 2008; **60**: 390-397.

104 Bao Q, Shi Y: Apoptosome: a platform for the activation of initiator caspases. *Cell Death Differ* 2007; **14**: 56-65.

105 Cohen G, M: Caspases: the executioners of apoptosis. *Biochem J* 1997; **326 (Pt 1)**: 1-16.

106 Ester A, R, Tyerman G, Wise C, A, Blanton S, H, Hecht J, T: Apoptotic gene analysis in idiopathic talipes equinovarus (clubfoot). *Clin Orthop Relat Res* 2007; **462**: 32-37.

107 Heck AL, Bray MS, Scott A, Blanton SH, Hecht JT: Variation in CASP10 gene is associated with idiopathic talipes equinovarus. *J Pediatr Orthop* 2005; **25**: 598-602.

108 Beals R, K: Club foot in the Maori: a genetic study of 50 kindreds. *N Z Med J* 1978; **88**: 144-146.

109 Lehman W: The Clubfoot. Philidelphia, J B Lippincott, 1980, pp 1-6.

110 Ponseti I, V, Pirani S, Dietz F, Morcuende J, A, Mosca V, Herzenberg J, E, Weinstein S, Penny N, Steenbeek M: Clubfoot: Ponseti Management. Global-HELP Organization, 2003.

111 Yang J, J: Mixed lineage kinase ZAK utilizing MKK7 and not MKK4 to activate the c-Jun N-terminal kinase and playing a role in the cell arrest. *Biochem Biophys Res Commun* 2002; **297**: 105-110.

112 Pichler A, Melchior F: Ubiquitin-related modifier SUMO1 and nucleocytoplasmic transport. *Traffic* 2002; **3**: 381-387.

113 Lin D, Y, Huang Y, S, Jeng J, C, Kuo H, Y, Chang C, C, Chao T, T, Ho C, C, Chen Y, C, Lin T, P, Fang H, I, Hung C, C, Suen C, S, Hwang M, J, Chang K, S, Maul G, G, Shih H, M: Role of SUMO-interacting motif in Daxx SUMO modification, subnuclear localization, and repression of sumoylated transcription factors. *Mol Cell* 2006; **24**: 341-354.

114 Huang T, T, Wuerzberger-Davis S, M, Wu Z, H, Miyamoto S: Sequential modification of NEMO/IKKgamma by SUMO-1 and ubiquitin mediates NF-kappaB activation by genotoxic stress. *Cell* 2003; **115**: 565-576.

115 Gu Q, Bowden G, T, Normolle D, Sun Y: SAG/ROC2 E3 ligase regulates skin carcinogenesis by stage-dependent targeting of c-Jun/AP1 and IkappaB-alpha/NF-kappaB. *J Cell Biol* 2007; **178**: 1009-1023.

116 Salaun B, Romero P, Lebecque S: Toll-like receptors' two-edged sword: when immunity meets apoptosis. *Eur J Immunol* 2007; **37**: 3311-3318.

117 Coux O, Goldberg A, L: Enzymes catalyzing ubiquitination and proteolytic processing of the p105 precursor of nuclear factor kappaB1. *J Biol Chem* 1998; **273**: 8820-8828.

118 Verstrepen L, Carpentier I, Verhelst K, Beyaert R: ABINs: A20 binding inhibitors of NF-kappa B and apoptosis signaling. *Biochem Pharmacol* 2009; **78**: 105-114.

119 Chuang TH, Ulevitch RJ: Triad3A, an E3 ubiquitin-protein ligase regulating Toll-like receptors. *Nat Immunol* 2004; **5**: 495-502.

120 Fearns C, Pan Q, Mathison J, C, Chuang T, H: Triad3A regulates ubiquitination and proteasomal degradation of RIP1 following disruption of Hsp90 binding. *J Biol Chem* 2006; **281**: 34592-34600.

121 Thome M, Weil R: Post-translational modifications regulate distinct functions of CARMA1 and BCL10. *Trends Immunol* 2007; **28**: 281-288.

122 Royuela M, Rodriguez-Berriguete G, Fraile B, Paniagua R: TNF-alpha/IL-1/NF-kappaB transduction pathway in human cancer prostate. *Histol Histopathol* 2008; **23**: 1279-1290.

123 Mori K, Ando K, Heymann D, Redini F: Receptor activator of nuclear factor-kappa B ligand (RANKL) stimulates bone-associated tumors through functional RANK expressed on bone-associated cancer cells? *Histol Histopathol* 2009; **24**: 235-242.

124 Luo S, Rubinsztein D, C: Huntingtin promotes cell survival by preventing Pak2 cleavage. *J Cell Sci* 2009; **122**: 875-885.

125 Calo V, Migliavacca M, Bazan V, Macaluso M, Buscemi M, Gebbia N, Russo A: STAT proteins: from normal control of cellular events to tumorigenesis. *J Cell Physiol* 2003; **197**: 157-168.

126 Yuan Z, Gong S, Luo J, Zheng Z, Song B, Ma S, Guo J, Hu C, Thiel G, Vinson C, Hu C, D, Wang Y, Li M: Opposing roles for ATF2 and c-Fos in c-Jun-mediated neuronal apoptosis. *Mol Cell Biol* 2009; **29**: 2431-2442.

127 Chai W, R, Wang Q, Gao H, B: NFAT2 is implicated in corticosterone-induced rat Leydig cell apoptosis. *Asian J Androl* 2007; **9**: 623-633.

128 Barlow C, A, Kitiphongspattana K, Siddiqui N, Roe M, W, Mossman B, T, Lounsbury K, M: Protein kinase A-mediated CREB phosphorylation is an oxidant-induced survival pathway in alveolar type II cells. *Apoptosis* 2008; **13**: 681-692.

129 Hitchens MR, Robbins PD: The role of the transcription factor DP in apoptosis. *Apoptosis* 2003; **8**: 461-468.

130 Hitchens M, R, Robbins P, D: The role of the transcription factor DP in apoptosis. *Apoptosis* 2003; **8**: 461-468.

131 Skapek S, X, Jansen D, Wei T, F, McDermott T, Huang W, Olson E, N, Lee E, Y: Cloning and characterization of a novel Kruppel-associated box family transcriptional repressor that interacts with the retinoblastoma gene product, RB. *J Biol Chem* 2000; **275**: 7212-7223.

132 Soni S, Bala S, Hanspal M: Requirement for erythroblast-macrophage protein (Emp) in definitive erythropoiesis. *Blood Cells Mol Dis* 2008; **41**: 141-147.

133 Park S, Y, Kang K, B, Thapa N, Kim S, Y, Lee S, J, Kim I, S: Requirement of adaptor protein GULP during stabilin-2-mediated cell corpse engulfment. *J Biol Chem* 2008; **283**: 10593-10600.

134 Shah S, Smith H, Feng X, Rancourt D, E, Riabowol K: ING function in apoptosis in diverse model systems. *Biochem Cell Biol* 2009; **87**: 117-125.

135 Myers K, Gagou M, E, Zuazua-Villar P, Rodriguez R, Meuth M: ATR and Chk1 suppress a caspase-3-dependent apoptotic response following DNA replication stress. *PLoS Genet* 2009; **5**: e1000324.

136 Ljungman M: The transcription stress response. *Cell Cycle* 2007; **6**: 2252-2257.

137 Larsen L, Ropke C: Suppressors of cytokine signalling: SOCS. *Apmis* 2002; **110**: 833-844.

138 Tuson M, Garanto A, Gonzalez-Duarte R, Marfany G: Overexpression of CERKL, a gene responsible for retinitis pigmentosa in humans, protects cells from apoptosis induced by oxidative stress. *Mol Vis* 2009; **15**: 168-180.

139 Fischer M, D, Budak M, T, Bakay M, Gorospe J, R, Kjellgren D, Pedrosa-Domellof F, Hoffman E, P, Khurana T, S: Definition of the unique human extraocular muscle allotype by expression profiling. *Physiol Genomics* 2005; **22**: 283-291.

140 Hao H, Dong Y, B, Bowling M, T, Zhou H, S, McMasters K, M: Alteration of gene expression in melanoma cells following combined treatment with E2F-1 and doxorubicin. *Anticancer Res* 2006; **26**: 1947-1956.

141 Delhalle S, Blasius R, Dicato M, Diederich M: A Beginner's Guide to NF-{kappa}B Signaling Pathways. *Ann N Y Acad Sci* 2004; **1030**: 1-13.

142 Martin E, R, Bass M, P, Gilbert J, R, Pericak-Vance M, A, Hauser E, R: Genotype-based association test for general pedigrees: the genotype-PDT. *Genet Epidemiol* 2003; **25**: 203-213.

143 Kerkhoff E, Ziff E, B: Deregulated messenger RNA expression during T cell apoptosis. *Nucleic Acids Res* 1995; **23**: 4857-4863.

144 Ester A, R, Weymouth K, S, Burt A, Wise C, A, Scott A, Gurnett C, A, Dobbs M, B, Blanton S, H, Hecht J, T: Altered transmission of HOX and apoptotic SNPs identify a potential common pathway for clubfoot. *Am J Med Genet A* 2009; **149A**: 2745-2752.

145 Carter C, O: The inheritance of common congenital malformations. *Prog Med Genet* 1965; **5**: 59-84.

146 Shaut CA, Keene DR, Sorensen LK, Li DY, Stadler HS: HOXA13 Is essential for placental vascular patterning and labyrinth endothelial specification. *PLoS Genet* 2008; **4**: e1000073.

147 Hall B, K, Miyake T: All for one and one for all: condensations and the initiation of skeletal development. *Bioessays* 2000; **22**: 138-147.

148 Dobbs M, B, Gurnett C, A, Pierce B, Exner G, U, Robarge J, Morcuende J, A, Cole W, G, Templeton P, A, Foster B, Bowcock A, M: HOXD10 M319K mutation in a family with isolated congenital vertical talus. *J Orthop Res* 2006; **24**: 448-453.

149 Shrimpton A, E, Levinsohn E, M, Yozawitz J, M, Packard D, S, J, Cady R, B, Middleton F, A, Persico A, M, Hootnick D, R: A HOX gene mutation in a family with isolated congenital vertical talus and Charcot-Marie-Tooth disease. *Am J Hum Genet* 2004; **75**: 92-96.

150 Carpenter E, M, Goddard J, M, Davis A, P, Nguyen T, P, Capecchi M, R: Targeted disruption of Hoxd-10 affects mouse hindlimb development. *Development* 1997; **124**: 4505-4514.

151 Tarchini B, Huynh T, H, Cox G, A, Duboule D: HoxD cluster scanning deletions identify multiple defects leading to paralysis in the mouse mutant Ironside. *Genes Dev* 2005; **19**: 2862-2876.

152 Akarsu A, N, Stoilov I, Yilmaz E, Sayli B, S, Sarfarazi M: Genomic structure of HOXD13 gene: a nine polyalanine duplication causes synpolydactyly in two unrelated families. *Hum Mol Genet* 1996; **5**: 945-952.

153 Muragaki Y, Mundlos S, Upton J, Olsen B, R: Altered growth and branching patterns in synpolydactyly caused by mutations in HOXD13. *Science* 1996; **272**: 548-551.

154 Stadler H, S, Higgins K, M, Capecchi M, R: Loss of Eph-receptor expression correlates with loss of cell adhesion and chondrogenic capacity in Hoxa13 mutant limbs. *Development* 2001; **128**: 4177-4188.

155 Rahimov F, Marazita M, L, Visel A, Cooper M, E, Hitchler M, J, Rubini M, Domann F, E, Govil M, Christensen K, Bille C, Melbye M, Jugessur A, Lie R, T, Wilcox A, J,

Fitzpatrick D, R, Green E, D, Mossey P, A, Little J, Steegers-Theunissen R, P, Pennacchio L, A, Schutte B, C, Murray J, C: Disruption of an AP-2alpha binding site in an IRF6 enhancer is associated with cleft lip. *Nat Genet* 2008.

156 Yoshimura M, Kimura T, Ishii M, Ishii K, Matsuura T, Geshi E, Hosokawa M, Muramatsu M: Functional polymorphisms in carboxylesterase1A2 (CES1A2) gene involves specific protein 1 (Sp1) binding sites. *Biochem Biophys Res Commun* 2008; **369**: 939-942.

157 Gurnett CA, Keppel C, Bick J, Bowcock AM, Dobbs MB: Absence of HOXD10 Mutations in Idiopathic Clubfoot and Sporadic Vertical Talus. *Clin Orthop Relat Res* 2007.

158 Marshall H, Morrison A, Studer M, Popperl H, Krumlauf R: Retinoids and Hox genes. *Faseb J* 1996; **10**: 969-978.

159 Lochmiller C, Johnston D, Scott A, Risman M, Hecht JT: Genetic epidemiology study of idiopathic talipes equinovarus. *Am J Med Genet* 1998; **79**: 90-96.

160 Chung CS, Nemechek RW, Larsen IJ, Ching GH: Genetic and epidemiological studies of clubfoot in Hawaii. General and medical considerations. *Hum Hered* 1969; **19**: 321-342.

Vita

Audrey Ricaud Ester was born in Stanford, California to Becky and Gary Ester on May 26, 1982. Audrey graduated from Plano Senior High School in Plano, TX in May, 2000, and began classes at Texas A&M Universtiy that fall. She received her BS is Genetics in May 2004. Audrey attended the University of Texas Health Science Center Houston and was very involved in student government at the institutional and system-wide level, and also chaired the UTserve volunteer initiative for two years. Audrey was also a trainee on two separate training grants, and won several presentation awards. Audrey Ester received her PhD in the spring of 2010 and wishes to pursue a career in clinical coordination and regulatory affairs.

Appendix A: Mitochondrial mediated apoptosis supplemental tables.

Table A1. LD plot for *CASP8* and *CASP10*

	rs3900115	rs3731714	rs3769825
rs3900115		0.835	0.891
rs3731714	0.919		0.905
rs3769825	0.926	1	

Significant LD values shown in yellow, NHW shown above the diagonal and Hispanics below the diagonal.

Table A2. LD plot for *CASP3*

	rs1049253	rs1049216	rs1049210	rs1405944	rs2696057	rs2720378	rs4647602	rs1405937
rs1049253		0.907	1	1	0.827	0.388	1	0.829
rs1049216	1		0.99	1	1	0.286	0.922	0.676
rs1049210	1	0.99		0	1	1	1	0.997
rs1405944	1	1	0		1	0.842	1	0.726
rs2696057	1	1	1	1		0.679	0.868	0.918
rs2720378	0.617	0.286	1	0.842	0.679		0.969	0.773
rs4647602	1	0.922	1	1	0.868	0.969		0.981
rs1405937	0.927	0.676	0.997	0.726	0.918	0.773	0.981	

Significant LD values shown in yellow, NHW shown above the diagonal and Hispanics below the diagonal.

Table A3. LD plot for *APAF-1*

	rs7310804	rs2278361	rs2288729	rs6538879	rs3782558	rs1866477	rs7968661
rs7310804		1	1	1	0.983	0.903	0.903
rs2278361	1		0.896	1	1	0.838	0.933
rs2288729	0.948	0.98		0.92	1	1	0.833
rs6538879	0.92	0.814	0.957		1	0.946	0.894
rs3782558	0.91	0.976	1	0.949		0.835	0.892
rs1866477	0.575	0.998	1	0.445	0.354		0.999
rs7968661	0.788	0.935	0.85	0.931	0.819	1	

Significant LD values shown in yellow, NHW shown above the diagonal and Hispanics below the diagonal.

Table A4. LD plot for *BCL-2*

	rs1564483	rs8083946	rs1801018	rs2551402	rs1809319
rs1564483		0.263	0.004	0.046	0.336
rs8083946	0.5		0.045	0.019	0.04
rs1801018	0.283	0.036		0.957	0.97
rs2551402	0.114	0.039	0.966		0.423
rs1809319	0.493	0.023	0.946	0.127	

Significant LD values shown in yellow, NHW shown above the diagonal and Hispanics below the diagonal.

Table A5. LD plot for *BID*

	rs8919	rs181399	rs2072392	rs8190315	rs181405	rs181410	rs5747351	rs3788284
rs8919		0.817	1	1	0.632	0.545	0.16	0.153
rs181399	0.946		0.999	0.999	0.927	0.704	0.566	0.519
rs2072392	0.774	0.973		0.705	0.999	1	0.205	0.66
rs8190315	0.229	0.996	0.697		0.145	1	1	1
rs181405	0.519	1	0.24	0.421		0.782	0.161	0.095
rsS181410	0.826	0.532	0.016	1	0.794		0.138	0.008
rs5747351	0.177	0.186	0.074	0.584	0.046	0.315		0.953
rs3788284	0.151	0.07	0.334	0.489	0.049	0.261	0.881	

Significant LD values shown in yellow, NHW shown above the diagonal and Hispanics below the diagonal.

Appendix B: Clubfoot Chromosomal Deletion Region Apoptotic Genes Supplemental Tables

Table B1. SNP locations, call rates and minor allele frequency (MAF)

Gene	Chr	SNP	BP Pos.	Location	Allele 1	Allele 2	Call Rate	NHW MAF	Hisp. CAF
ZAK	2	rs989531	173641864	Upstream	C	T	68.4	0.34	0.34
ZAK	2	rs6433395	173652126	Intron 1	C	T	75.0	0.48	0.33
ZAK	2	rs6759787	173668095	Intron 2	C	T	72.2	0.40	0.44
ZAK	2	rs17302977	173681546	Intron 2	C	T	66.9	0.43	0.20
ZAK	2	rs3769192	173700047	Intron 2	C	T	69.1	0.44	0.28
ZAK	2	rs4344898	173718318	Intron 2	G	T	74.8	0.41	0.42
ZAK	2	rs13032010	173741939	Intron 2	A	G	70.6	0.38	0.22
ZAK	2	rs1837470	173756617	Intron 4	C	T	72.3	0.48	0.59
ZAK	2	rs4972533	173779131	Intron 8	G	T	68.8	0.39	0.24
ZAK	2	rs2028382	173795993	Intron 10/3'UTR	G	T	70.6	0.49	0.33
ZAK	2	rs11685001	173812993	Intron 14	A	G	66.3	0.48	0.33
ZAK	2	rs11686011	173826292	Intron 14	A	G	66.4	0.43	0.23
ZAK	2	rs12618933	173844602	Downstream	C	T	74.1	0.49	0.28
CREB2	2	rs212352	175651527	Intron 12	C	T	73.7	0.33	0.40
CREB2	2	rs2698545	175697794	Intron 4	A	G	73.3	0.16	0.20
CREB2	2	rs10930693	175708457	Intron 3	C	T	71.1	0.23	0.28
CERKL	2	rs1047307	182109997	3' UTR	A	G	74.9	0.39	0.43
CERKL	2	rs11680383	182127394	Intron 6	C	T	66.5	0.35	0.24
CERKL	2	rs895901	182145339	Intron 3	A	T	74.8	0.28	0.33
CERKL	2	rs10445770	182168959	Intron 2	A	C	68.5	0.45	0.38
CERKL	2	rs1992394	182186910	Intron 1	C	T	70.3	0.45	0.43
CERKL	2	rs935087	182212013	Intron 1	A	G	64.5	0.37	0.34
CERKL	2	rs1866888	182235205	Upstream	C	T	72.7	0.45	0.40
GULP1	2	rs10931346	188862356	Upstream	C	T	71.1	0.44	0.60
GULP1	2	rs7593546	188877480	Intron 1	A	G	73.0	0.41	0.28
GULP1	2	rs4396679	188898949	Intron 1	G	T	73.1	0.40	0.28
GULP1	2	rs7586390	188922938	Intron 1	A	G	73.3	0.49	0.34
GULP1	2	rs12624002	188969212	Intron 2	G	T	69.9	0.46	0.50
GULP1	2	rs12474692	188989874	Intron 2	A	G	71.3	0.44	0.32
GULP1	2	rs10931359	189016529	Intron 2	A	G	66.4	0.39	0.52
GULP1	2	rs6724428	189085754	Intron 4	A	G	72.7	0.50	0.60
GULP1	2	rs11685321	189105316	Intron 6	A	G	72.2	0.43	0.34
GULP1	2	rs13034731	189122609	Intron 7	C	T	70.3	0.36	0.28
GULP1	2	rs1354905	189154716	Intron 8	A	G	73.6	0.49	0.46
STAT1	2	rs12468579	191540509	Downstream	A	G	73.7	0.44	0.51
STAT1	2	rs13395505	191546759	Intron 24	A	G	67.7	0.46	0.37
STAT1	2	rs2280233	191558811	Intron 14	A	G	71.0	0.45	0.32
STAT1	2	rs7562024	191563766	Intron 11	C	T	70.3	0.34	0.48
STAT1	2	rs6751855	191593016	Upstream	A	G	43.3	0.37	0.41
STAT4	2	rs925847	191605785	Intron 21	C	T	72.4	0.32	0.50
STAT4	2	rs16833215	191622044	Intron 13	A	G	51.2	0.37	0.59
STAT4	2	rs1517352	191639709	Intron 6	A	C	83.1	0.36	0.28
STAT4	2	rs16833249	191656517	Intron 3	C	T	74.0	0.37	0.41
STAT4	2	rs11693480	191665940	Intron 3	A	C	72.4	0.43	0.47
STAT4	2	rs12463658	191673589	Intron 3	A	C	71.3	0.34	0.26

Gene	Chr	SNP	BP Pos.	Location	Allele 1	Allele 2	Call Rate	NHW MAF	Hisp. CAF
STAT4	2	rs4853543	191684879	Intron 3	A	G	71.6	0.50	0.72
STAT4	2	rs4341967	191692531	Intron 3	A	T	71.1	0.44	0.40
STAT4	2	rs6738544	191697601	Intron 3	A	C	68.9	0.37	0.39
STAT4	2	rs7574909	191706191	Intron 3	C	T	72.7	0.35	0.43
STAT4	2	rs2356350	191710783	Intron 3	A	G	67.1	0.39	0.36
STAT4	2	rs11685878	191717700	Intron 3	C	T	55.9	0.33	0.30
STAT4	2	rs7572482	191723317	Intron 1	A	G	70.7	0.46	0.35
STAT4	2	rs897200	191726016	Upstream	A	G	88.0	0.38	0.32
SUMO1	2	rs6717044	202778312	Downstream	C	T	78.5	0.40	0.25
SUMO1	2	rs4675272	202794974	Intron 1	C	G	83.5	0.40	0.22
SUMO1	2	rs6755690	202798838	Intron 1	C	G	81.8	0.48	0.35
SUMO1	2	rs6709162	202806804	Intron 1	C	T	83.7	0.50	0.61
SUMO1	2	rs3754931	202811646	Upstream	C	T	79.4	0.46	0.57
CREB1	2	rs2253206	208100223	Upstream	A	G	70.9	0.42	0.34
CREB1	2	rs2551640	208116138	Intron 1	A	G	72.4	0.45	0.46
CREB1	2	rs10932201	208134502	Intron 4	A	G	72.5	0.42	0.40
CREB1	2	rs2254137	208152273	Intron 8	A	C	71.5	0.40	0.44
SPSB4	3	rs1108693	142351405	Upstream	C	T	73.4	0.43	0.45
RNF7	3	rs1980191	142939365	Upstream	A	T	67.8	0.49	0.45
RNF7	3	rs6769676	142944537	Intron 1	G	T	69.9	0.33	0.22
RNF7	3	rs6776205	142955345	Downstream	C	G	73.4	0.44	0.55
TFDP2	3	rs2163294	143151143	Downstream	A	C	68.3	0.44	0.41
TFDP2	3	rs7642874	143180562	Intron 3	C	T	73.2	0.40	0.33
TFDP2	3	rs9877536	143200426	Intron 1	C	G	67.5	0.49	0.34
TFDP2	3	rs13065446	143220532	Upstream	C	T	63.7	0.40	0.29
ATR	3	rs9816736	143655470	Intron 43	C	T	68.2	0.43	0.53
ATR	3	rs3922730	143685547	Intron 34	A	T	68.2	0.44	0.52
ATR	3	rs4273389	143696620	Intron 31	A	G	66.9	0.49	0.39
ATR	3	rs6440085	143715433	Intron 24	A	T	68.3	0.46	0.51
ATR	3	rs7651071	143726540	Intron 21	A	T	70.0	0.50	0.42
ATR	3	rs13085998	143746502	Intron 16	C	T	66.0	0.43	0.51
ATR	3	rs2227928	143764302	Intron 4	C	T	62.4	0.43	0.28
ATR	3	rs6792259	143784129	Upstream	A	T	72.2	0.47	0.48
MAEA	4	rs1680073	1270337	Upstream	C	T	70.0	0.47	0.33
MAEA	4	rs11727167	1275521	Intron 1	A	G	72.0	0.45	0.53
MAEA	4	rs7673398	1290077	Intron 1	A	G	64.9	0.40	0.32
MAEA	4	rs12641735	1294434	Intron 1	C	G	73.7	0.23	0.16
MAEA	4	rs12642410	1298409	Intron 2	A	G	72.8	0.47	0.45
MAEA	4	rs1316393	1305619	Intron 3	A	G	73.1	0.40	0.31
MAEA	4	rs7664474	1319116	Intron 6	A	T	75.2	0.37	0.42
MAEA	4	rs12647145	1328618	Downstream	A	C	69.9	0.28	0.16
TNIP2	4	rs9683949	2714278	Intron 5	C	T	69.1	0.40	0.38
TNIP2	4	rs4690055	2718461	Intron 2	A	G	72.1	0.49	0.71
TNIP2	4	rs4690060	2730020	Upstream	A	G	68.2	0.43	0.39
HTT	4	rs762855	3044593	Upstream	C	T	65.4	0.37	0.39
HTT	4	rs2285086	3059057	Intron 2	C	T	60.8	0.49	0.42
HTT	4	rs10015979	3079240	Intron 6	A	G	71.6	0.44	0.36
HTT	4	rs6446723	3096611	Intron 10	C	T	68.3	0.42	0.48

Gene	Chr	SNP	BP Pos.	Location	Allele 1	Allele 2	Call Rate	NHW MAF	Hisp. CAF
HTT	4	rs6855981	3118074	Intron 19	A	G	70.8	0.40	0.36
HTT	4	rs4690074	3131854	Intron 23	C	T	66.0	0.44	0.33
HTT	4	rs363096	3149819	Intron 28	A	G	61.2	0.27	0.35
HTT	4	rs363092	3165827	Intron 34	G	T	65.0	0.39	0.36
HTT	4	rs362336	3183630	Intron 39	C	T	65.1	0.33	0.30
HTT	4	rs362331	3185633	Intron 41	C	T	64.0	0.46	0.35
HTT	4	rs2269478	3204626	Intron 51	A	C	64.4	0.38	0.32
TLR10	4	rs10776482	38451180	Exon 4 (synon)	C	T	69.8	0.40	0.25
TLR10	4	rs11096955	38452502	Exon 4 (I369L)	A	C	67.5	0.40	0.22
TLR10	4	rs11096957	38452886	Exon 4 (N241H)	A	C	70.2	0.48	0.35
TLR10	4	rs7658893	38458815	Intron 1	A	G	69.9	0.50	0.61
TLR1	4	rs4833095	38476105	Exon 4 (N248S)	C	T	67.9	0.46	0.57
TLR1	4	rs5743565	38482378	Intron 1	A	G	71.7	0.42	0.34
TLR6	4	rs5743818	38505558	Exon 1 (synon)	G	T	69.7	0.45	0.46
TLR6	4	rs3821985	38506407	Exon 1 (synon)	C	G	63.0	0.34	0.34
TLR6	4	rs5743810	38506745	Exon 1 (S249P)	C	T	70.7	0.42	0.40
WDR19	4	rs1451821	38856812	Upstream	A	C	62.5	0.40	0.44
WDR19	4	rs6815686	38876186	Intron 5	A	T	68.9	0.43	0.45
WDR19	4	rs9997015	38900692	Intron 12	A	G	71.9	0.49	0.45
WDR19	4	rs9998591	38918506	Inron 17	A	C	67.9	0.33	0.22
WDR19	4	rs11096987	38935585	Intron 22	A	G	71.1	0.44	0.55
WDR19	4	rs3733280	38947936	Intron 25	A	G	65.2	0.44	0.41
WDR19	4	rs12648082	38956119	Intron 29	C	T	68.4	0.40	0.33
WDR19	4	rs1057807	38965868	Downstream	C	T	58.5	0.49	0.34
UBE2K	4	rs3912392	39375133	Upstream	A	G	75.1	0.40	0.29
UBE2K	4	rs13122400	39390138	Intron 1	C	T	55.7	0.43	0.53
UBE2K	4	rs12644528	39398637	Intron 1	C	T	74.9	0.44	0.52
UBE2K	4	rs302947	39419957	Intron 2	C	T	72.3	0.49	0.39
UBE2K	4	rs305827	39436384	Intron 4	G	T	73.3	0.46	0.51
UBE2K	4	rs10440307	39442582	Intron 4	C	T	41.3	0.50	0.42
UBE2K	4	rs4263408	39461671	Downstream	C	T	75.9	0.43	0.51
CARMA1	7	rs11982651	2908799	Downstream	C	T	70.3	0.43	0.28
CARMA1	7	rs1713911	2928435	Intron 15	A	C	66.9	0.47	0.48
CARMA1	7	rs1476636	2950046	Intron 5	C	T	64.4	0.47	0.33
CARMA1	7	rs4722276	2985330	Intron 1	C	G	64.1	0.45	0.53
CARMA1	7	rs12538346	2997820	Intron 1	C	T	66.9	0.40	0.32
CARMA1	7	rs10236776	3015535	Intron 1	A	G	70.5	0.23	0.16
CARMA1	7	rs4722356	3044023	Intron 1	C	G	71.3	0.47	0.45
RBAK	7	rs7805748	5048563	Upstream	C	T	72.2	0.40	0.31
RBAK	7	rs10238244	5062844	Intron 2	C	T	70.4	0.37	0.42
RBAK	7	rs7778444	5074398	3' UTR	A	G	70.6	0.28	0.16
TRIAD3	7	rs852374	5642645	Downstream	A	G	72.2	0.40	0.38

Gene	Chr	SNP	BP Pos.	Location	Allele 1	Allele 2	Call Rate	NHW MAF	Hisp. CAF
TRIAD3	7	rs13246406	5647119	Intron 15	C	T	72.7	0.49	0.71
TRIAD3	7	rs852522	5660069	Intron 13	C	T	68.5	0.43	0.39
TRIAD3	7	rs13247447	5665490	Intron 13	A	G	69.3	0.37	0.39
TRIAD3	7	rs852417	5670195	Intron 13	C	T	13.9	0.49	0.42
TRIAD3	7	rs3823681	5675186	Intron 13	C	T	72.3	0.44	0.36
TRIAD3	7	rs3779092	5679126	Intron 13	C	T	71.8	0.42	0.48
TRIAD3	7	rs852394	5687974	Intron 13	C	T	82.2	0.40	0.36
TRIAD3	7	rs1468996	5700983	Intron 13	A	G	78.5	0.44	0.33
TRIAD3	7	rs2302907	5727386	Intron 8	C	T	80.4	0.27	0.35
TRIAD3	7	rs13239194	5736015	Intron 6	C	T	69.4	0.39	0.36
TRIAD3	7	rs13237614	5740628	Intron 5	G	T	78.7	0.33	0.30
TRIAD3	7	rs2112006	5752771	Intron 3	C	T	77.9	0.46	0.35
TRIAD3	7	rs11771172	5760746	Intron 2	C	T	79.6	0.38	0.32
TRIAD3	7	rs6971918	5768152	Intron 1	C	T	83.9	0.40	0.25
TRIAD3	7	rs10257204	5773667	Intron 1	A	G	80.5	0.40	0.22
TRIAD3	7	rs6967635	5780459	Intron 1	G	T	87.2	0.48	0.35
TRIAD3	7	rs2017620	5802244	Upstream	C	T	73.8	0.50	0.61
TNFSF13B	13	rs9514828	107719374	Upstream	C	T	85.4	0.46	0.57
TNFSF13B	13	rs8181791	107732046	Intron 1	A	G	62.2	0.42	0.34
TNFSF13B	13	rs10508198	107740789	Intron 2	C	G	60.2	0.45	0.46
TNFSF13B	13	rs9520835	107754318	Intron 3	A	G	84.0	0.34	0.34
TNFSF13B	13	rs1224163	107763060	Downstream	G	T	85.8	0.42	0.40
ING1	13	rs4773240	110158586	Upstream	A	G	67.0	0.40	0.44
ING1	13	rs1441043	110165651	Intron 1	A	G	63.0	0.43	0.45
ING1	13	rs6492308	110175830	Downstream	C	T	70.9	0.49	0.45
TFDP1	13	rs7325214	113284925	Upstream	C	T	67.7	0.33	0.22
TFDP1	13	rs4150703	113300578	Intron 2	A	G	61.8	0.44	0.55
TFDP1	13	rs9577595	113316202	Intron 3	C	T	71.5	0.44	0.41
TFDP1	13	rs12428926	113332373	Intron 4	C	T	71.5	0.04	0.33
TFDP1	13	rs4150832	113343955	Downstream	C	T	65.1	0.49	0.34
TNFRSF11A	18	rs2981007	58133882	Upstream	C	T	79.2	0.40	0.29
TNFRSF11A	18	rs4941125	58148664	Intron 1	A	G	82.7	0.43	0.53
TNFRSF11A	18	rs7239261	58156026	Intron 1	A	C	85.4	0.44	0.52
TNFRSF11A	18	rs4263037	58167213	Intron 2	A	G	82.7	0.49	0.39
TNFRSF11A	18	rs7236060	58174262	Intron 4	A	G	85.1	0.46	0.51
TNFRSF11A	18	rs8094884	58179108	Intron 6	A	G	77.2	0.50	0.42
TNFRSF11A	18	rs8089829	58182884	Intron 7	A	G	74.0	0.43	0.51
TNFRSF11A	18	rs12959396	58190289	Intron 9	G	T	82.0	0.43	0.28
TNFRSF11A	18	rs9646629	58202179	Intron 9	C	G	26.6	0.47	0.48
TNFRSF11A	18	rs2957125	58209322	Downstream	A	T	52.8	0.47	0.33
SOCS6	18	rs7230661	66099091	Upstream	A	G	83.7	0.45	0.53
SOCS6	18	rs713130	66111574	Intron 1	C	T	74.5	0.40	0.32
SOCS6	18	rs2053420	66118259	Intron 1	C	T	83.6	0.23	0.16
NFAT2	18	rs9962479	75256172	Upstream	A	G	64.3	0.47	0.45
NFAT2	18	rs8090692	75264917	Intron 2	A	G	82.5	0.40	0.31
NFAT2	18	rs2036892	75269524	Intron 2	A	T	84.9	0.37	0.42
NFAT2	18	rs4799055	75282991	Intron 3	G	T	79.6	0.28	0.16
NFAT2	18	rs8097537	75294234	Intron 3	C	T	82.8	0.40	0.38

Gene	Chr	SNP	BP Pos.	Location	Allele 1	Allele 2	Call Rate	NHW MAF	Hisp. CAF
NFAT2	18	rs12608349	75300626	Intron 4	C	T	80.4	0.49	0.71
NFAT2	18	rs2290154	75312163	Intron 6	C	T	78.1	0.43	0.39
NFAT2	18	rs7227107	75328464	Exon 9 (synon)	A	G	37.9	0.37	0.39
NFAT2	18	rs370989	75348674	Intron 10	C	G	85.5	0.49	0.42
NFAT2	18	rs1667673	75353032	Intron 10	C	G	79.0	0.44	0.36
NFAT2	18	rs1660139	75371686	Intron 10	A	G	83.3	0.42	0.48
NFAT2	18	rs177820	75377952	Intron 10	C	T	76.5	0.40	0.36
NFAT2	18	rs3894049	75385918	Intron 10	C	G	86.2	0.44	0.33
NFAT2	18	rs183374	75392406	Downstream	A	G	83.5	0.27	0.35

Chr=chromosome; BP Pos.=base pair position; NHW=nonHispanic white; MAF=minor allele frequency; Hisp.=Hispanic; CAF=corresponding allele frequency; synon=synonymous; blue squares denote SNPs out of Hardy-Weinberg Equilibrium.

Table B2. Association of apoptotic genes with clubfoot in nonHispanic whites.

			NHW			NHW FHx			NHW Trios		
Gene	Chr	SNP	APL	PDT	GenPDT	APL	PDT	GenPDT	APL	PDT	GenPDT
ZAK	2	rs989531	0.794	0.383	0.482	0.273	0.674	0.185	0.300	0.276	0.461
ZAK	2	rs6433395	**0.039**	0.591	0.064	0.241	0.842	0.647	0.068	0.109	**0.011**
ZAK	2	rs6759787	0.107	0.125	0.288	0.061	0.098	0.181	0.813	0.782	0.911
ZAK	2	rs17302977	0.616	0.712	0.947	0.843	0.652	0.929	0.785	1.000	0.924
ZAK	2	rs3769192	**0.012**	0.272	0.548	0.281	0.933	0.988	**0.011**	0.071	0.212
ZAK	2	rs4344898	0.393	0.867	0.879	0.751	0.409	0.666	0.428	0.387	0.629
ZAK	2	rs13032010	**0.034**	0.187	0.401	0.318	0.334	0.666	**0.035**	0.317	0.361
ZAK	2	rs1837470	N/A	N/A	N/A	N/A	N/A	N/A	N/A	N/A	N/A
ZAK	2	rs4972533	0.557	0.657	0.919	0.866	0.610	0.865	0.567	1.000	0.918
ZAK	2	rs2028382	0.519	0.649	0.707	0.799	0.466	0.565	0.247	0.668	0.903
ZAK	2	rs11685001	0.198	0.098	0.180	0.595	0.265	0.467	0.144	0.166	0.308
ZAK	2	rs11686011	0.314	0.543	0.663	0.104	0.363	0.138	0.668	0.655	0.447
ZAK	2	rs12618933	0.485	0.281	0.622	0.339	0.317	0.586	0.990	0.647	0.632
ATF2/CREB2	2	rs212352	**0.043**	0.154	0.212	0.263	0.490	0.378	0.089	0.061	0.134
ATF2/CREB2	2	rs2698545	N/A	N/A	N/A	N/A	N/A	N/A	N/A	N/A	N/A
ATF2/CREB2	2	rs10930693	N/A	N/A	N/A	N/A	N/A	N/A	N/A	N/A	N/A
CERKL	2	rs1047307	0.931	1.000	0.968	0.654	0.785	0.910	0.459	0.639	0.893
CERKL	2	rs11680383	0.345	N/A	N/A	0.608	N/A	N/A	0.430	N/A	N/A
CERKL	2	rs895901	0.303	0.312	0.548	0.405	0.224	0.188	0.568	0.893	0.334
CERKL	2	rs10445770	0.330	0.350	0.332	0.791	0.590	0.355	0.073	0.345	0.670
CERKL	2	rs1992394	0.050	0.147	0.279	0.354	0.248	0.293	0.071	0.376	0.318
CERKL	2	rs935087	0.493	0.466	0.728	0.434	0.541	0.817	0.913	0.691	0.525
CERKL	2	rs1866888	0.862	0.519	0.443	0.712	0.526	0.526	0.814	0.895	0.817
GULP1	2	rs10931346	0.249	0.302	0.613	0.856	0.155	0.248	0.127	0.674	0.297
GULP1	2	rs7593546	0.779	0.904	0.694	0.127	0.427	0.648	**0.021**	0.132	0.271
GULP1	2	rs4396679	0.095	0.826	0.447	0.803	0.735	0.302	**0.016**	0.307	0.622
GULP1	2	rs7586390	0.691	0.844	0.937	0.385	0.363	0.550	0.081	0.233	0.057
GULP1	2	rs12624002	0.746	0.773	0.876	0.512	0.746	0.954	0.811	1.000	0.696
GULP1	2	rs12474692	0.136	0.938	0.646	0.869	0.233	0.371	**0.027**	0.083	0.219
GULP1	2	rs10931359	0.247	0.212	0.307	0.507	0.927	0.792	**0.006**	**0.025**	0.112
GULP1	2	rs6724428	0.116	1.000	0.344	0.396	0.807	0.658	0.100	0.639	0.348
GULP1	2	rs11685321	0.110	0.140	0.352	0.329	0.351	0.571	0.201	0.180	0.243
GULP1	2	rs13034731	0.124	0.957	0.995	0.483	0.732	0.888	0.145	0.446	0.640
GULP1	2	rs1354905	0.734	0.175	0.460	0.400	0.665	0.879	0.208	0.047	0.160
STAT1	2	rs12468579	0.406	0.785	0.561	0.814	0.211	0.326	0.291	0.095	0.209
STAT1	2	rs13395505	0.325	0.292	0.521	0.977	0.270	0.482	0.127	0.847	0.953
STAT1	2	rs2280233	0.767	0.632	0.710	0.271	0.901	0.821	0.525	0.547	0.801
STAT1	2	rs7562024	0.508	0.895	0.973	0.216	0.882	0.969	0.724	1.000	1.000
STAT1	2	rs6751855	0.425	0.243	0.154	0.577	0.066	0.173	0.533	0.599	0.178
STAT4	2	rs925847	0.701	0.558	0.401	0.526	0.895	0.982	0.875	0.317	**0.032**
STAT4	2	rs16833215	0.580	0.635	0.851	0.913	0.782	0.241	0.514	0.647	0.098
STAT4	2	rs1517352	0.830	0.541	0.826	0.207	0.307	0.562	0.345	0.612	0.860
STAT4	2	rs16833249	0.465	0.567	0.216	0.079	0.836	0.092	0.329	0.052	0.180
STAT4	2	rs11693480	0.817	0.484	0.328	0.610	0.541	0.522	0.377	0.695	0.400
STAT4	2	rs12463658	0.894	0.498	0.692	0.482	0.363	0.696	0.292	0.763	0.574
STAT4	2	rs4853543	0.863	0.394	0.052	0.930	0.330	**0.020**	0.622	1.000	1.000

Gene	Chr	SNP	NHW			NHW FHx			NHW Trios		
			APL	PDT	GenPDT	APL	PDT	GenPDT	APL	PDT	GenPDT
STAT4	2	rs4341967	0.656	0.574	0.695	0.892	0.915	0.730	0.420	0.332	0.578
STAT4	2	rs6738544	0.506	0.878	0.071	0.270	0.602	0.053	0.833	0.194	0.429
STAT4	2	rs7574909	0.227	0.768	0.926	0.396	0.592	0.864	0.358	0.617	0.783
STAT4	2	rs2356350	0.976	0.118	0.218	0.385	0.439	0.764	0.333	**0.020**	**0.016**
STAT4	2	rs11685878	0.303	0.458	**0.014**	0.873	0.924	0.057	0.064	0.105	0.121
STAT4	2	rs7572482	0.961	0.958	0.063	0.735	0.859	0.079	0.730	0.808	0.761
STAT4	2	rs897200	0.219	0.830	0.808	0.313	0.717	0.316	0.484	0.413	0.459
SUMO1	2	rs6717044	0.481	0.319	0.334	0.692	0.694	0.855	0.141	0.152	0.144
SUMO1	2	rs4675272	0.099	0.820	0.947	0.387	0.950	0.994	0.157	0.701	0.770
SUMO1	2	rs6755690	0.260	0.357	0.081	0.402	0.354	0.143	0.483	0.816	0.241
SUMO1	2	rs6709162	N/A	N/A	N/A	N/A	N/A	N/A	N/A	N/A	N/A
SUMO1	2	rs3754931	0.735	0.569	0.266	0.252	0.462	0.210	0.427	0.862	0.963
CREB1	2	rs2253206	N/A	N/A	N/A	N/A	N/A	N/A	N/A	N/A	N/A
CREB1	2	rs2551640	**0.013**	0.307	0.176	**0.031**	0.682	0.314	0.128	0.150	0.367
CREB1	2	rs10932201	N/A	N/A	N/A	N/A	N/A	N/A	N/A	N/A	N/A
CREB1	2	rs2254137	0.540	0.068	0.174	0.790	0.083	0.091	0.592	0.547	0.258
SPSB4	3	rs1108693	0.861	0.806	0.416	0.155	0.747	0.721	0.132	0.842	0.193
RNF7	3	rs1980191	0.589	0.380	0.330	0.906	0.729	0.204	0.398	0.273	0.555
RNF7	3	rs6769676	0.672	0.836	0.884	0.439	0.496	0.759	0.862	0.304	0.399
RNF7	3	rs6776205	0.290	0.796	0.630	0.899	0.756	0.524	0.055	1.000	1.000
TFDP2	3	rs2163294	0.611	0.389	0.684	0.666	0.596	0.840	0.198	0.398	0.749
TFDP2	3	rs7642874	0.896	0.868	0.767	0.215	0.843	0.561	0.173	0.537	0.809
TFDP2	3	rs9877536	N/A	N/A	N/A	N/A	N/A	N/A	N/A	N/A	N/A
TFDP2	3	rs13065446	0.757	0.939	0.663	0.991	0.722	0.530	0.632	0.466	0.781
ATR	3	rs9816736	N/A	N/A	N/A	N/A	N/A	N/A	N/A	N/A	N/A
ATR	3	rs3922730	0.135	0.429	0.702	0.376	0.451	0.519	0.178	0.786	0.657
ATR	3	rs4273389	0.330	0.391	0.489	0.938	0.071	0.063	0.119	0.149	**0.023**
ATR	3	rs6440085	0.245	0.759	0.303	0.201	0.914	0.306	0.871	0.537	0.781
ATR	3	rs7651071	0.246	0.576	0.855	0.898	0.698	0.627	0.062	0.124	0.052
ATR	3	rs13085998	0.258	0.383	0.669	0.952	0.925	0.483	0.112	0.140	0.175
ATR	3	rs2227928	0.487	0.674	0.352	0.497	0.437	0.304	0.492	0.796	0.895
ATR	3	rs6792259	0.711	0.473	0.811	0.605	0.122	0.380	0.910	0.413	0.700
EMP	4	rs1680073	0.402	0.665	0.191	0.153	0.452	0.261	0.708	0.668	0.247
EMP	4	rs11727167	0.486	0.417	0.629	0.474	0.916	0.390	0.107	0.170	0.249
EMP	4	rs7673398	0.240	0.365	0.305	0.449	0.777	0.377	**0.021**	0.059	0.175
EMP	4	rs12641735	0.794	0.519	0.619	0.885	0.579	0.682	0.836	0.724	0.895
EMP	4	rs12642410	0.123	0.377	0.603	0.979	0.837	0.484	**0.018**	**0.040**	0.133
EMP	4	rs1316393	0.074	0.190	0.135	0.949	0.683	0.081	**0.010**	0.063	0.114
EMP	4	rs7664474	0.920	0.682	0.811	0.135	0.772	0.863	0.134	0.217	0.490
EMP	4	rs12647145	0.756	0.755	0.818	0.527	0.649	0.911	0.802	0.879	0.479
TNIP2	4	rs9683949	0.298	0.243	0.520	0.235	0.066	0.206	0.900	0.466	0.450
TNIP2	4	rs4690055	**0.015**	0.191	0.448	0.662	0.584	0.803	**0.004**	**0.001**	**0.007**
TNIP2	4	rs4690060	0.424	1.000	0.746	0.538	1.000	0.356	0.742	1.000	0.543
HTT	4	rs762855	0.286	0.171	0.389	0.373	0.249	0.409	0.489	0.460	0.659
HTT	4	rs2285086	0.816	0.131	0.193	0.146	**0.031**	**0.022**	0.132	0.297	0.508
HTT	4	rs10015979	N/A	N/A	N/A	N/A	N/A	N/A	N/A	N/A	N/A
HTT	4	rs6446723	N/A	N/A	N/A	N/A	N/A	N/A	N/A	N/A	N/A
HTT	4	rs6855981	0.340	0.334	0.275	0.213	0.334	0.287	0.891	0.796	0.872

Gene	Chr	SNP	NHW			NHW FHx			NHW Trios		
			APL	PDT	GenPDT	APL	PDT	GenPDT	APL	PDT	GenPDT
HTT	4	rs4690074	0.688	0.382	0.321	0.684	0.344	0.364	0.925	0.891	0.811
HTT	4	rs363096	N/A	N/A	N/A	N/A	N/A	N/A	N/A	N/A	N/A
HTT	4	rs363092	0.728	0.433	0.455	0.355	0.203	0.069	0.552	0.599	0.214
HTT	4	rs362336	0.680	0.944	0.078	0.805	0.937	0.060	0.630	0.768	0.866
HTT	4	rs362331	0.401	1.000	0.875	0.105	0.850	0.936	0.617	0.763	0.828
HTT	4	rs2269478	0.986	0.514	0.831	0.880	0.569	0.537	0.944	0.746	0.433
TLR10	4	rs10776482	0.627	0.317	0.153	0.696	0.933	0.247	0.146	0.080	0.154
TLR10	4	rs11096955	0.850	0.701	0.186	0.850	0.521	0.612	0.614	0.777	0.115
TLR10	4	rs11096957	**0.004**	**0.041**	0.148	0.191	0.180	0.462	**0.003**	0.090	0.203
TLR10	4	rs7658893	N/A	N/A	N/A	N/A	N/A	N/A	N/A	N/A	N/A
TLR1	4	rs4833095	0.664	0.662	0.856	0.371	1.000	0.742	0.713	0.355	0.682
TLR1	4	rs5743565	0.690	0.513	0.366	0.677	1.000	0.488	0.811	0.180	0.357
TLR6	4	rs5743818	**0.043**	0.185	0.504	0.161	0.377	0.703	0.128	0.258	0.135
TLR6	4	rs3821985	0.356	0.246	0.445	0.979	0.936	0.266	0.102	**0.014**	**0.017**
TLR6	4	rs5743810	0.194	0.253	0.363	0.313	0.246	0.314	0.433	0.786	0.967
WDR19	4	rs1451821	**0.017**	0.237	0.412	0.367	0.918	0.983	**0.012**	0.053	0.135
WDR19	4	rs6815686	0.540	0.867	0.289	0.611	0.463	0.505	0.687	0.484	0.303
WDR19	4	rs9997015	0.152	0.262	0.494	0.104	0.544	0.703	0.864	0.238	0.533
WDR19	4	rs9998591	0.492	0.667	0.499	0.961	0.742	0.686	0.336	0.140	0.364
WDR19	4	rs11096987	0.666	0.368	0.579	0.912	0.480	0.711	0.350	0.572	0.809
WDR19	4	rs3733280	0.017	0.293	0.117	0.307	0.833	0.376	**0.015**	0.059	0.112
WDR19	4	rs12648082	**0.044**	0.686	0.631	0.155	0.924	0.759	0.127	0.355	0.646
WDR19	4	rs1057807	N/A	N/A	N/A	N/A	N/A	N/A	N/A	N/A	N/A
UBE2K	4	rs3912392	0.929	0.655	0.262	0.830	0.592	0.229	0.912	0.105	0.269
UBE2K	4	rs13122400	N/A	N/A	N/A	N/A	N/A	N/A	N/A	N/A	N/A
UBE2K	4	rs12644528	0.575	0.750	0.908	0.278	0.514	0.777	0.916	0.647	0.898
UBE2K	4	rs302947	0.290	0.171	0.389	0.500	0.262	0.319	0.387	0.411	0.113
UBE2K	4	rs305827	0.966	0.898	0.309	0.339	0.440	0.142	0.274	0.042	0.160
UBE2K	4	rs10440307	0.466	0.761	0.434	0.359	0.513	0.697	0.977	0.405	0.277
UBE2K	4	rs4263408	0.556	0.657	0.892	**0.032**	0.211	0.508	0.089	0.237	0.515
CARMA1	7	rs11982651	0.607	0.570	0.829	0.346	0.123	0.222	0.753	0.140	0.114
CARMA1	7	rs1713911	0.518	1.000	0.973	0.921	0.689	0.897	0.386	0.612	0.889
CARMA1	7	rs1476636	0.521	0.109	0.311	0.196	**0.022**	0.090	0.583	0.411	0.625
CARMA1	7	rs4722276	0.985	0.690	0.091	0.633	0.698	0.237	0.731	0.889	0.344
CARMA1	7	rs12538346	0.598	0.357	0.650	0.584	0.190	0.290	0.881	0.789	0.484
CARMA1	7	rs10236776	**0.026**	**0.049**	0.121	**0.024**	**0.050**	0.116	0.356	0.612	0.692
CARMA1	7	rs4722356	0.911	0.945	0.812	0.364	0.622	0.438	0.217	0.529	0.565
RBAK	7	rs7805748	0.381	0.758	0.820	0.278	0.454	0.719	0.847	0.586	0.241
RBAK	7	rs10238244	0.175	0.080	0.169	0.136	**0.048**	0.093	0.875	1.000	0.333
RBAK	7	rs7778444	0.767	0.241	0.444	0.988	0.284	0.345	0.587	0.631	0.805
TRIAD3	7	rs852374	0.608	0.196	0.426	0.624	0.325	0.558	0.836	0.387	0.716
TRIAD3	7	rs13246406	0.275	0.544	0.765	0.092	0.371	0.620	0.962	0.724	0.921
TRIAD3	7	rs852522	0.916	0.689	0.356	0.905	0.385	0.550	0.781	0.612	0.404
TRIAD3	7	rs13247447	0.130	0.645	0.690	0.214	0.365	0.594	0.327	0.564	0.717
TRIAD3	7	rs852417	0.093	0.317	0.513	0.174	1.000	1.000	0.291	0.317	0.317
TRIAD3	7	rs3823681	N/A	N/A	N/A	**N/A**	N/A	N/A	N/A	N/A	N/A
TRIAD3	7	rs3779092	N/A	N/A	N/A	N/A	N/A	N/A	N/A	N/A	N/A
TRIAD3	7	rs852394	0.362	0.159	0.265	0.460	0.330	0.306	0.564	0.258	0.540

Gene	Chr	SNP	NHW			NHW FHx			NHW Trios		
			APL	PDT	GenPDT	APL	PDT	GenPDT	APL	PDT	GenPDT
TRIAD3	7	rs1468996	0.411	0.900	0.925	0.573	0.944	0.743	0.601	0.680	0.071
TRIAD3	7	rs2302907	N/A	N/A	N/A	N/A	N/A	N/A	N/A	N/A	N/A
TRIAD3	7	rs13239194	0.571	0.404	0.452	0.429	1.000	0.488	0.131	0.170	0.390
TRIAD3	7	rs13237614	0.755	0.772	0.830	0.192	0.732	0.636	0.077	0.273	0.518
TRIAD3	7	rs2112006	0.801	0.137	0.446	0.528	0.052	0.289	0.872	1.000	0.920
TRIAD3	7	rs11771172	**0.012**	0.127	0.121	**0.006**	0.336	0.361	0.659	0.189	0.233
TRIAD3	7	rs6971918	0.730	0.408	0.773	0.513	0.320	0.685	0.802	0.886	0.974
TRIAD3	7	rs10257204	0.680	0.290	0.352	0.404	0.768	0.614	0.254	0.149	0.268
TRIAD3	7	rs6967635	0.421	0.502	0.813	0.482	0.368	0.712	0.648	0.763	0.910
TRIAD3	7	rs2017620	N/A	N/A	N/A	N/A	N/A	N/A	N/A	N/A	N/A
TNFSF13B	13	rs9514828	0.619	0.536	0.760	0.969	0.216	0.345	0.523	0.453	0.137
TNFSF13B	13	rs8181791	N/A	N/A	N/A	N/A	N/A	N/A	N/A	N/A	N/A
TNFSF13B	13	rs10508198	0.329	0.644	0.777	0.628	0.912	0.753	0.421	0.317	0.214
TNFSF13B	13	rs9520835	**0.004**	**0.009**	**0.023**	**0.005**	0.113	0.166	0.218	**0.022**	0.083
TNFSF13B	13	rs1224163	N/A	N/A	N/A	N/A	N/A	N/A	N/A	N/A	N/A
ING1	13	rs4773240	0.388	0.645	0.538	0.249	0.433	0.697	0.837	0.493	0.309
ING1	13	rs1441043	**0.038**	0.788	0.118	0.551	0.739	0.407	**0.020**	0.366	0.184
ING1	13	rs6492308	0.166	0.667	0.877	0.174	0.916	0.910	0.653	0.555	0.866
TFDP1	13	rs7325214	0.428	0.902	0.367	0.846	0.826	0.786	0.283	0.569	0.141
TFDP1	13	rs4150703	0.289	0.581	0.140	0.348	0.383	0.171	0.523	0.732	0.638
TFDP1	13	rs9577595	0.805	0.504	0.098	0.480	0.269	0.162	0.789	0.706	0.475
TFDP1	13	rs12428926	0.247	1.000	0.812	0.605	0.331	0.232	**0.022**	0.114	0.126
TFDP1	13	rs4150832	N/A	N/A	N/A	N/A	N/A	N/A	N/A	N/A	N/A
TNFRSF11A	18	rs2981007	0.362	0.854	0.209	0.086	0.947	0.297	0.575	0.758	0.419
TNFRSF11A	18	rs4941125	N/A	N/A	N/A	N/A	N/A	N/A	N/A	N/A	N/A
TNFRSF11A	18	rs7239261	0.302	0.419	0.335	0.211	0.461	0.319	0.784	0.732	0.932
TNFRSF11A	18	rs4263037	0.484	0.887	0.972	0.520	0.933	0.682	0.737	0.895	0.207
TNFRSF11A	18	rs7236060	N/A	N/A	N/A	N/A	N/A	N/A	N/A	N/A	N/A
TNFRSF11A	18	rs8094884	0.292	1.000	0.786	0.607	0.865	0.275	0.362	0.768	0.452
TNFRSF11A	18	rs8089829	**0.041**	0.660	0.178	**0.048**	0.558	0.623	0.422	0.879	0.100
TNFRSF11A	18	rs12959396	0.565	0.687	0.335	0.204	0.871	0.708	0.736	0.500	0.229
TNFRSF11A	18	rs9646629	0.240	0.059	0.070	0.090	0.103	0.135	0.754	0.317	0.317
TNFRSF11A	18	rs2957125	0.238	0.088	0.197	0.542	0.116	0.510	0.307	0.423	0.081
SOCS6	18	rs7230661	0.135	0.777	0.338	0.308	0.398	0.161	0.265	0.439	0.749
SOCS6	18	rs713130	0.379	0.293	0.176	0.379	0.225	0.456	0.658	1.000	**0.021**
SOCS6	18	rs2053420	**0.037**	**0.041**	0.062	**0.016**	**0.030**	0.080	0.806	0.691	0.695
NFAT2	18	rs9962479	0.942	0.555	0.391	0.430	0.347	0.261	0.454	0.662	0.890
NFAT2	18	rs8090692	0.892	0.172	0.308	0.649	0.365	0.648	0.714	0.267	0.290
NFAT2	18	rs2036892	0.585	0.163	0.401	0.862	0.086	0.136	0.379	0.668	0.429
NFAT2	18	rs4799055	0.957	0.475	0.484	0.523	0.686	0.280	0.445	0.332	0.484
NFAT2	18	rs8097537	0.852	0.364	0.173	0.965	0.160	0.071	0.731	0.500	0.807
NFAT2	18	rs12608349	0.848	0.710	0.761	0.913	0.480	0.758	0.688	0.606	0.171
NFAT2	18	rs2290154	0.397	0.490	0.482	0.688	0.847	0.542	0.073	0.241	0.369
NFAT2	18	rs7227107	0.412	0.493	**0.040**	0.683	1.000	0.189	0.126	0.206	0.169
NFAT2	18	rs370989	0.458	**0.020**	0.062	0.495	**0.013**	**0.036**	0.700	0.896	0.979
NFAT2	18	rs1667673	N/A	N/A	N/A	N/A	N/A	N/A	N/A	N/A	N/A
NFAT2	18	rs1660139	N/A	N/A	N/A	N/A	N/A	N/A	N/A	N/A	N/A
NFAT2	18	rs177820	0.684	0.620	0.833	0.561	0.871	0.976	0.230	0.385	0.445

			NHW			NHW FHx			NHW Trios		
Gene	Chr	SNP	APL	PDT	GenPDT	APL	PDT	GenPDT	APL	PDT	GenPDT
NFAT2	18	rs3894049	0.788	**0.041**	0.166	0.560	**0.042**	0.163	0.827	0.593	0.527
NFAT2	18	rs183374	N/A	N/A	N/A	N/A	N/A	N/A	N/A	N/A	N/A

Table B3. Association of apoptotic genes with clubfoot in Hispanics.

			Hisp.			Hisp. FHx			Hisp. Trios		
Gene	Chr	SNP	APL	PDT	GenPDT	APL	PDT	GenPDT	APL	PDT	GenPDT
ZAK	2	rs989531	0.552	0.316	0.448	0.359	0.262	0.329	0.938	0.866	0.511
ZAK	2	rs6433395	N/A	N/A	N/A	N/A	N/A	N/A	N/A	N/A	N/A
ZAK	2	rs6759787	N/A	N/A	N/A	N/A	N/A	N/A	N/A	N/A	N/A
ZAK	2	rs17302977	0.273	0.328	0.502	0.288	0.562	0.393	0.588	0.178	0.226
ZAK	2	rs3769192	N/A	N/A	N/A	N/A	N/A	N/A	N/A	N/A	N/A
ZAK	2	rs4344898	0.156	0.079	0.152	0.385	0.340	0.564	0.310	0.103	0.215
ZAK	2	rs13032010	0.390	0.063	0.231	0.933	0.237	0.143	0.351	0.152	0.183
ZAK	2	rs1837470	0.981	0.371	0.537	0.386	0.380	0.596	0.518	0.786	0.897
ZAK	2	rs4972533	0.328	0.702	0.672	0.486	0.277	0.493	0.085	0.317	0.461
ZAK	2	rs2028382	N/A	N/A	N/A	N/A	N/A	N/A	N/A	N/A	N/A
ZAK	2	rs11685001	N/A	N/A	N/A	N/A	N/A	N/A	N/A	N/A	N/A
ZAK	2	rs11686011	0.797	0.406	0.720	0.278	0.144	0.250	0.657	0.876	0.723
ZAK	2	rs12618933	0.988	0.496	0.690	0.391	0.463	0.579	0.624	1.000	1.000
ATF2/CREB2	2	rs212352	**0.046**	0.069	0.063	0.500	0.254	0.236	0.070	0.083	0.175
ATF2/CREB2	2	rs2698545	N/A	N/A	N/A	N/A	N/A	N/A	N/A	N/A	N/A
ATF2/CREB2	2	rs10930693	0.525	0.423	0.768	0.815	0.632	0.915	0.290	0.466	0.774
CERKL	2	rs1047307	0.825	0.424	0.549	0.809	0.340	0.445	0.763	0.858	0.441
CERKL	2	rs11680383	0.325	0.448	0.702	0.281	0.456	0.668	0.664	0.873	0.796
CERKL	2	rs895901	0.327	0.190	0.333	0.899	0.831	0.289	0.196	**0.019**	0.110
CERKL	2	rs10445770	0.342	0.861	0.871	0.038	0.225	0.373	0.740	0.310	0.100
CERKL	2	rs1992394	0.963	1.000	0.963	0.494	0.594	0.742	0.535	0.160	0.412
CERKL	2	rs935087	N/A	N/A	N/A	N/A	N/A	N/A	N/A	N/A	N/A
CERKL	2	rs1866888	0.751	0.562	0.830	0.937	0.547	0.808	0.749	0.893	0.958
GULP1	2	rs10931346	0.345	0.353	0.262	0.788	0.406	0.382	0.285	0.655	0.627
GULP1	2	rs7593546	0.726	0.603	0.850	0.367	0.480	0.709	0.827	0.891	0.799
GULP1	2	rs4396679	0.698	1.000	0.302	0.535	0.697	0.235	0.932	0.446	0.738
GULP1	2	rs7586390	N/A	N/A	N/A	N/A	N/A	N/A	N/A	N/A	N/A
GULP1	2	rs12624002	N/A	N/A	N/A	N/A	N/A	N/A	N/A	N/A	N/A
GULP1	2	rs12474692	0.987	0.424	0.099	0.921	0.935	0.128	0.964	0.114	0.285
GULP1	2	rs10931359	N/A	N/A	N/A	N/A	N/A	N/A	N/A	N/A	N/A
GULP1	2	rs6724428	0.622	0.592	0.777	0.946	0.413	0.680	0.601	0.777	0.413
GULP1	2	rs11685321	0.786	0.301	0.573	0.110	0.460	0.656	0.534	**0.013**	**0.030**
GULP1	2	rs13034731	0.418	0.281	0.589	0.332	0.876	0.943	0.761	0.180	0.364
GULP1	2	rs1354905	0.204	**0.043**	0.243	0.161	**0.025**	0.246	0.692	0.492	0.431
STAT1	2	rs12468579	0.872	0.286	0.452	0.286	0.077	0.212	0.379	0.873	0.975
STAT1	2	rs13395505	0.155	**0.007**	**0.040**	0.835	0.251	0.646	0.089	**0.013**	0.050
STAT1	2	rs2280233	0.770	0.604	0.616	0.742	0.748	0.454	0.973	0.662	0.913
STAT1	2	rs7562024	0.144	0.491	**0.010**	0.986	0.758	0.182	0.105	0.170	**0.025**
STAT1	2	rs6751855	0.959	0.292	0.381	0.369	0.519	0.763	0.461	0.317	0.155
STAT4	2	rs925847	0.429	0.092	0.072	**0.016**	0.096	0.136	0.537	0.578	0.419
STAT4	2	rs16833215	0.765	0.922	0.222	0.064	0.206	0.368	0.386	0.385	0.072
STAT4	2	rs1517352	0.617	0.302	0.665	0.813	0.493	0.474	0.685	0.439	0.469
STAT4	2	rs16833249	0.516	0.102	**0.039**	0.685	0.221	0.305	0.650	0.262	**0.026**
STAT4	2	rs11693480	0.568	1.000	0.298	0.781	0.144	0.216	0.380	0.228	0.088
STAT4	2	rs12463658	0.209	0.906	0.116	0.544	0.847	0.269	0.314	0.763	0.418
STAT4	2	rs4853543	0.400	0.134	0.330	0.109	0.159	0.462	0.981	0.492	0.598
STAT4	2	rs4341967	0.808	1.000	0.169	0.759	0.851	0.192	0.919	0.758	0.611

			Hisp.			Hisp. FHx			Hisp. Trios		
Gene	Chr	SNP	APL	PDT	GenPDT	APL	PDT	GenPDT	APL	PDT	GenPDT
STAT4	2	rs6738544	0.300	0.093	0.330	0.106	**0.044**	0.212	0.916	0.746	0.260
STAT4	2	rs7574909	0.168	0.095	0.283	0.383	0.083	0.153	0.280	0.547	0.595
STAT4	2	rs2356350	0.760	0.914	0.670	0.806	0.901	0.472	0.873	1.000	1.000
STAT4	2	rs11685878	0.751	0.117	0.087	0.724	0.128	0.149	0.444	0.537	**0.038**
STAT4	2	rs7572482	0.141	0.325	0.053	0.381	0.900	0.478	0.202	0.128	**0.049**
STAT4	2	rs897200	0.443	0.393	0.434	0.361	0.345	0.474	0.772	0.789	0.698
SUMO1	2	rs6717044	0.714	0.927	0.614	0.539	0.816	0.170	0.973	0.882	0.835
SUMO1	2	rs4675272	0.693	0.933	0.484	0.152	0.732	0.927	0.642	0.806	0.214
SUMO1	2	rs6755690	0.179	0.755	0.292	0.921	0.051	**0.040**	0.113	0.071	0.051
SUMO1	2	rs6709162	0.898	0.612	0.244	0.585	0.178	0.122	0.577	0.307	0.651
SUMO1	2	rs3754931	0.237	0.510	0.735	**0.032**	0.106	0.205	0.920	0.257	0.492
CREB1	2	rs2253206	N/A	N/A	N/A	N/A	N/A	N/A	N/A	N/A	N/A
CREB1	2	rs2551640	0.758	0.845	0.922	0.607	0.722	0.716	0.334	0.384	0.315
CREB1	2	rs10932201	0.193	0.922	0.891	0.658	0.086	0.283	0.061	0.286	0.356
CREB1	2	rs2254137	N/A	N/A	N/A	N/A	N/A	N/A	N/A	N/A	N/A
SPSB4	3	rs1108693	0.159	**0.022**	0.098	0.256	0.050	0.090	0.349	0.237	0.121
RNF7	3	rs1980191	0.383	0.052	0.187	0.351	0.128	0.421	0.681	0.228	0.156
RNF7	3	rs6769676	0.225	0.484	0.526	0.796	0.670	0.477	0.168	0.578	0.829
RNF7	3	rs6776205	0.962	0.925	0.986	0.746	0.696	0.776	0.763	0.586	0.809
TFDP2	3	rs2163294	0.603	0.603	0.840	0.258	0.325	0.561	1.000	0.593	0.092
TFDP2	3	rs7642874	N/A	N/A	N/A	N/A	N/A	N/A	N/A	N/A	N/A
TFDP2	3	rs9877536	N/A	N/A	N/A	**N/A**	N/A	N/A	N/A	N/A	N/A
TFDP2	3	rs13065446	N/A	N/A	N/A	N/A	N/A	N/A	N/A	N/A	N/A
ATR	3	rs9816736	0.196	0.178	0.112	0.883	0.469	0.146	0.179	0.139	0.072
ATR	3	rs3922730	0.425	0.773	0.235	0.681	0.414	0.254	0.498	0.221	0.354
ATR	3	rs4273389	0.133	0.399	0.135	**0.022**	0.433	0.728	0.653	0.647	0.098
ATR	3	rs6440085	N/A	N/A	N/A	N/A	N/A	N/A	N/A	N/A	N/A
ATR	3	rs7651071	0.906	0.192	0.141	0.077	0.280	0.281	0.230	0.456	0.468
ATR	3	rs13085998	0.617	0.325	0.459	0.240	0.387	0.588	0.730	0.602	0.308
ATR	3	rs2227928	0.733	0.356	0.531	0.883	0.174	0.289	0.615	0.131	0.231
ATR	3	rs6792259	N/A	N/A	N/A	N/A	N/A	N/A	N/A	N/A	N/A
EMP	4	rs1680073	0.633	0.651	0.874	0.282	0.612	0.843	0.816	0.879	0.773
EMP	4	rs11727167	0.809	0.235	0.584	0.503	0.132	0.426	0.824	0.793	0.624
EMP	4	rs7673398	0.862	0.916	0.448	0.611	0.586	0.418	0.847	0.612	0.801
EMP	4	rs12641735	0.077	0.048	0.051	0.726	0.201	0.399	**0.045**	0.131	0.080
EMP	4	rs12642410	0.328	**0.035**	0.218	0.125	**0.040**	0.325	0.868	0.264	0.309
EMP	4	rs1316393	N/A	N/A	N/A	N/A	N/A	N/A	N/A	N/A	N/A
EMP	4	rs7664474	0.577	0.166	0.478	0.091	**0.027**	0.302	0.741	1.000	0.486
EMP	4	rs12647145	N/A	N/A	N/A	N/A	N/A	N/A	N/A	N/A	N/A
TNIP2	4	rs9683949	0.603	0.652	0.278	0.645	0.827	0.360	0.756	0.631	0.629
TNIP2	4	rs4690055	0.783	0.216	0.420	0.942	1.000	0.683	0.726	0.103	0.252
TNIP2	4	rs4690060	0.329	1.000	0.681	0.707	0.505	0.678	0.198	0.606	0.749
HTT	4	rs762855	**0.010**	0.211	0.469	0.053	0.078	0.211	0.105	0.842	0.921
HTT	4	rs2285086	0.682	0.547	0.602	0.573	0.397	0.642	0.961	0.670	0.418
HTT	4	rs10015979	0.484	0.838	0.980	0.956	0.889	0.588	0.503	0.655	0.548
HTT	4	rs6446723	**0.042**	0.365	0.172	**<0.001**	0.330	0.587	0.654	0.752	0.107
HTT	4	rs6855981	0.265	0.710	0.758	0.240	0.633	0.217	0.656	1.000	0.657
HTT	4	rs4690074	0.799	0.169	0.246	0.590	0.513	0.528	0.518	0.128	**0.018**

			Hisp.			Hisp. FHx			Hisp. Trios		
Gene	Chr	SNP	APL	PDT	GenPDT	APL	PDT	GenPDT	APL	PDT	GenPDT
HTT	4	rs363096	0.567	0.806	0.223	0.913	0.862	0.754	0.561	0.602	0.247
HTT	4	rs363092	0.370	0.228	0.165	0.819	0.268	0.322	0.340	0.622	0.408
HTT	4	rs362336	0.994	0.199	0.355	0.406	0.096	0.147	0.515	0.622	0.703
HTT	4	rs362331	0.936	0.686	0.356	0.564	0.907	0.432	0.583	0.549	0.757
HTT	4	rs2269478	0.144	0.384	0.462	0.363	0.637	0.665	0.239	0.398	0.512
TLR10	4	rs10776482	0.153	0.480	0.552	0.133	0.399	0.464	0.535	1.000	0.878
TLR10	4	rs11096955	0.118	0.547	0.696	**0.022**	0.683	0.879	0.648	0.297	0.445
TLR10	4	rs11096957	0.932	0.942	0.537	0.763	0.859	0.690	0.867	0.710	0.761
TLR10	4	rs7658893	0.481	0.251	0.183	0.750	0.245	0.327	0.529	0.900	0.376
TLR1	4	rs4833095	0.670	0.180	0.129	0.296	0.458	0.735	0.268	0.182	**0.013**
TLR1	4	rs5743565	N/A	N/A	N/A	N/A	N/A	N/A	N/A	N/A	N/A
TLR6	4	rs5743818	0.444	0.289	0.543	0.610	0.772	0.902	0.548	**0.038**	0.095
TLR6	4	rs3821985	0.665	0.458	0.722	0.490	0.742	0.318	0.301	0.384	0.448
TLR6	4	rs5743810	0.379	**0.015**	0.088	0.192	0.179	0.243	0.053	**0.033**	0.112
WDR19	4	rs1451821	N/A	N/A	N/A	N/A	N/A	N/A	N/A	N/A	N/A
WDR19	4	rs6815686	0.186	0.140	0.248	0.054	0.586	0.818	0.707	0.096	0.131
WDR19	4	rs9997015	0.248	**0.029**	**0.045**	0.271	0.067	0.142	0.414	0.216	0.230
WDR19	4	rs9998591	0.622	0.701	0.769	0.139	0.933	0.664	0.629	0.433	0.796
WDR19	4	rs11096987	0.664	0.207	0.379	0.701	0.302	0.576	0.455	0.446	0.236
WDR19	4	rs3733280	0.437	0.820	0.850	0.502	0.281	0.463	0.150	0.199	0.385
WDR19	4	rs12648082	N/A	N/A	N/A	N/A	N/A	N/A	N/A	N/A	N/A
WDR19	4	rs1057807	N/A	N/A	N/A	N/A	N/A	N/A	N/A	N/A	N/A
UBE2K	4	rs3912392	N/A	N/A	N/A	N/A	N/A	N/A	N/A	N/A	N/A
UBE2K	4	rs13122400	0.131	0.187	0.134	0.651	0.535	0.512	0.113	0.157	0.169
UBE2K	4	rs12644528	0.203	0.383	0.288	0.771	0.706	0.744	0.205	0.307	0.235
UBE2K	4	rs302947	0.160	0.150	0.332	0.200	0.375	0.530	0.424	0.216	0.453
UBE2K	4	rs305827	N/A	N/A	N/A	N/A	N/A	N/A	N/A	N/A	N/A
UBE2K	4	rs10440307	0.925	0.330	0.112	0.175	0.317	0.178	0.338	0.670	0.507
UBE2K	4	rs4263408	0.657	0.678	0.888	0.244	0.756	0.882	0.209	0.267	0.351
CARMA1	7	rs11982651	0.158	0.302	0.573	0.923	0.746	0.893	0.091	0.285	0.582
CARMA1	7	rs1713911	N/A	N/A	N/A	N/A	N/A	N/A	N/A	N/A	N/A
CARMA1	7	rs1476636	0.815	0.052	0.177	0.232	0.052	0.193	0.626	0.516	0.601
CARMA1	7	rs4722276	0.814	0.537	0.521	0.260	0.371	0.570	0.563	1.000	0.654
CARMA1	7	rs12538346	0.603	0.082	0.322	0.275	0.100	0.323	0.873	0.522	0.484
CARMA1	7	rs10236776	0.265	0.211	0.444	0.407	0.216	0.336	0.506	0.758	0.258
CARMA1	7	rs4722356	0.109	0.243	**0.031**	0.090	0.924	0.391	0.483	**0.028**	**0.048**
RBAK	7	rs7805748	0.189	0.884	0.724	0.602	0.601	0.816	0.242	0.354	0.134
RBAK	7	rs10238244	0.640	0.258	0.494	0.447	0.144	0.284	0.941	0.686	0.905
RBAK	7	rs7778444	N/A	N/A	N/A	N/A	N/A	N/A	N/A	N/A	N/A
TRIAD3	7	rs852374	**0.005**	**0.003**	**0.020**	**0.013**	**0.020**	0.087	0.058	0.063	0.223
TRIAD3	7	rs13246406	0.747	1.000	1.000	0.240	0.619	0.691	0.266	0.446	0.755
TRIAD3	7	rs852522	0.066	**0.012**	**0.042**	**0.006**	**0.017**	0.116	0.759	0.297	0.195
TRIAD3	7	rs13247447	0.359	0.384	0.383	0.275	0.446	0.800	0.655	0.655	0.181
TRIAD3	7	rs852417	0.612	0.317	0.513	0.440	1.000	1.000	0.272	0.317	0.317
TRIAD3	7	rs3823681	0.429	0.928	0.991	0.848	0.895	0.853	0.317	1.000	0.739
TRIAD3	7	rs3779092	0.594	0.912	0.572	0.996	0.516	0.453	0.543	0.446	0.681
TRIAD3	7	rs852394	0.515	0.878	0.646	0.136	0.626	0.378	0.775	0.710	0.850
TRIAD3	7	rs1468996	0.599	1.000	0.831	0.211	1.000	0.616	0.913	1.000	1.000

			Hisp.			Hisp. FHx			Hisp. Trios		
Gene	Chr	SNP	APL	PDT	GenPDT	APL	PDT	GenPDT	APL	PDT	GenPDT
TRIAD3	7	rs2302907	0.158	0.384	0.713	0.072	0.505	0.820	0.487	0.553	0.805
TRIAD3	7	rs13239194	0.578	0.535	0.670	0.891	0.425	0.487	0.445	1.000	0.203
TRIAD3	7	rs13237614	0.391	0.155	0.248	0.682	0.361	0.550	0.180	0.257	0.402
TRIAD3	7	rs2112006	0.933	0.508	0.185	0.910	0.796	0.379	0.889	0.392	0.279
TRIAD3	7	rs11771172	0.558	0.722	0.090	0.209	0.310	0.584	0.111	0.134	**0.050**
TRIAD3	7	rs6971918	0.732	0.652	0.445	0.817	0.612	0.283	0.785	0.898	0.980
TRIAD3	7	rs10257204	0.773	0.909	0.544	0.804	0.862	0.754	0.789	0.763	0.683
TRIAD3	7	rs6967635	0.882	0.459	0.507	0.455	0.183	0.279	0.488	0.500	0.725
TRIAD3	7	rs2017620	0.612	0.157	0.363	0.311	0.170	0.385	0.859	0.578	0.860
TNFSF13B	13	rs9514828	0.218	0.684	0.593	0.159	0.763	0.866	0.646	0.782	0.622
TNFSF13B	13	rs8181791	N/A	N/A	N/A	N/A	N/A	N/A	N/A	N/A	N/A
TNFSF13B	13	rs10508198	0.353	0.579	0.690	0.904	0.267	0.252	0.246	0.578	0.177
TNFSF13B	13	rs9520835	0.849	0.395	0.075	0.423	0.066	0.120	0.808	0.655	0.425
TNFSF13B	13	rs1224163	0.911	0.243	0.462	0.371	0.269	0.416	0.403	0.623	0.879
ING1	13	rs4773240	N/A	N/A	N/A	N/A	N/A	N/A	N/A	N/A	N/A
ING1	13	rs1441043	0.117	0.056	0.157	0.722	0.157	0.337	0.056	0.189	0.380
ING1	13	rs6492308	0.236	0.164	0.227	0.337	0.311	0.416	0.448	0.217	0.357
TFDP1	13	rs7325214	0.688	0.579	0.414	0.252	0.274	0.175	0.178	0.752	0.899
TFDP1	13	rs4150703	0.139	0.070	**0.016**	0.929	0.819	0.269	0.053	**0.028**	**0.041**
TFDP1	13	rs9577595	0.610	0.630	0.513	0.315	0.352	0.228	0.870	0.456	0.695
TFDP1	13	rs12428926	N/A	N/A	N/A	N/A	N/A	N/A	N/A	N/A	N/A
TFDP1	13	rs4150832	N/A	N/A	N/A	N/A	N/A	N/A	N/A	N/A	N/A
TNFRSF11A	18	rs2981007	**N/A**	N/A	N/A	N/A	N/A	N/A	N/A	N/A	N/A
TNFRSF11A	18	rs4941125	**0.025**	0.475	0.635	**<0.001**	0.608	0.810	0.598	0.617	0.777
TNFRSF11A	18	rs7239261	**0.007**	0.075	0.179	0.103	0.353	0.636	0.033	0.128	0.276
TNFRSF11A	18	rs4263037	0.337	0.454	0.765	0.307	0.354	0.612	0.597	0.895	0.979
TNFRSF11A	18	rs7236060	0.654	0.296	0.513	0.752	0.592	0.391	0.816	0.332	0.096
TNFRSF11A	18	rs8094884	0.071	**0.010**	0.111	**0.042**	0.059	0.435	0.448	0.066	0.185
TNFRSF11A	18	rs8089829	0.789	0.840	0.922	0.875	0.686	0.859	0.836	0.879	0.976
TNFRSF11A	18	rs12959396	0.765	0.796	0.584	0.111	0.793	0.309	0.557	0.569	0.774
TNFRSF11A	18	rs9646629	N/A	N/A	N/A	N/A	N/A	N/A	N/A	N/A	N/A
TNFRSF11A	18	rs2957125	0.463	0.842	0.533	0.635	0.486	0.320	0.284	0.117	0.286
SOCS6	18	rs7230661	0.600	0.629	0.496	0.843	1.000	0.226	0.412	0.453	0.701
SOCS6	18	rs713130	0.727	0.689	0.625	0.730	0.276	0.202	0.821	0.555	0.866
SOCS6	18	rs2053420	0.125	0.191	0.387	0.152	0.739	0.782	0.424	0.118	0.153
NFATC1/NFAT2	18	rs9962479	0.924	0.297	0.204	0.275	0.083	0.083	0.242	0.763	0.695
NFATC1/NFAT2	18	rs8090692	N/A	N/A	N/A	N/A	N/A	N/A	N/A	N/A	N/A
NFATC1/NFAT2	18	rs2036892	0.996	0.706	0.273	0.856	0.564	0.624	0.944	0.317	0.271
NFATC1/NFAT2	18	rs4799055	N/A	N/A	N/A	N/A	N/A	N/A	N/A	N/A	N/A
NFATC1/NFAT2	18	rs8097537	**0.025**	**<0.001**	**0.002**	0.183	0.433	0.752	0.053	**<0.001**	**0.001**
NFATC1/NFAT2	18	rs12608349	0.102	0.061	**0.001**	0.552	0.884	**0.027**	**0.021**	**0.016**	**0.005**
NFATC1/NFAT2	18	rs2290154	0.877	0.928	0.922	0.540	0.366	0.680	0.766	0.574	0.840
NFATC1/NFAT2	18	rs7227107	0.958	0.884	0.423	0.808	0.414	0.574	0.817	0.876	0.635
NFATC1/NFAT2	18	rs370989	**0.003**	**0.003**	**0.003**	**0.001**	0.274	0.164	0.077	**0.003**	**0.009**
NFATC1/NFAT2	18	rs1667673	0.123	0.206	0.347	0.291	0.297	0.366	0.249	0.456	0.761
NFATC1/NFAT2	18	rs1660139	0.690	0.302	0.537	0.657	0.144	0.073	0.499	0.803	0.613
NFATC1/NFAT2	18	rs177820	0.399	0.317	0.550	0.062	0.132	0.186	0.709	0.655	0.761
NFATC1/NFAT2	18	rs3894049	**<0.001**	**0.001**	**0.004**	**0.016**	0.670	0.935	**0.007**	**0.000**	**0.000**

			Hisp.			Hisp. FHx			Hisp. Trios		
Gene	Chr	SNP	APL	PDT	GenPDT	APL	PDT	GenPDT	APL	PDT	GenPDT
NFATC1/NFAT2	18	rs183374	0.588	0.212	0.430	0.199	0.615	0.868	0.133	0.172	0.422

Table B4. Gene-gene interactions of clubfoot deletion region apoptotic genes p<0.01 in NHW.

Gene 1	SNP 1	Gene 2	SNP 2	p-value
ATF2/CREB2	rs10930693	CERKL	rs11680383	0.0024
ATF2/CREB2	rs10930693	HTT	rs2269478	0.0091
ATF2/CREB2	rs2698545	TNFSF13B	rs8181791	0.0082
ATR	rs13085998	NFATC1/NFAT2	rs4799055	0.0029
ATR	rs13085998	NFATC1/NFAT2	rs8097537	0.0073
ATR	rs13085998	TNIP2	rs4690060	0.0046
ATR	rs13085998	TRIAD3	rs13246406	0.0088
ATR	rs2227928	TRIAD3	rs852394	0.0098
ATR	rs6440085	TRIAD3	rs852417	0.0079
ATR	rs13085998	UBE2K	rs302947	0.0044
ATR	rs6792259	UBE2K	rs302947	0.0094
ATR	rs7651071	UBE2K	rs302947	0.0042
CARD11/CARMA1	rs12538346	ING1	rs4773240	0.0074
CARD11/CARMA1	rs11982651	NFATC1/NFAT2	rs2290154	0.0054
CARD11/CARMA1	rs1713911	TNFSF13B	rs8181791	0.002
CERKL	rs1866888	HTT	rs6855981	0.0035
CERKL	rs1866888	EMP	rs12641735	0.0011
CERKL	rs11680383	NFATC1/NFAT2	rs1660139	0.0091
CERKL	rs1866888	TFDP1	rs4150832	0.0015
CERKL	rs1047307	TLR1	rs5743565	0.009
CERKL	rs895901	TLR6	rs3821985	0.007
CERKL	rs11680383	TNFRSF11A	rs9646629	0.0068
CREB1	rs2253206	ATR	rs6440085	0.0037
CREB1	rs2551640	HTT	rs2285086	**0.0002**
CREB1	rs10932201	NFATC1/NFAT2	rs2290154	0.0057
CREB1	rs2254137	NFATC1/NFAT2	rs3894049	0.0068
CREB1	rs2551640	NFATC1/NFAT2	rs3894049	0.0044
CREB1	rs2254137	TLR10	rs11096955	0.0058
GULP1	rs10931359	ING1	rs4773240	0.01
GULP1	rs13034731	STAT4	rs1517352	0.0076
GULP1	rs10931346	TFDP2	rs13065446	0.0082
GULP1	rs12624002	TFDP2	rs13065446	0.0092
GULP1	rs13034731	TFDP2	rs13065446	0.0031
GULP1	rs13034731	TFDP2	rs7642874	0.0019
GULP1	rs7586390	TNFRSF11A	rs7239261	0.0078
GULP1	rs1354905	TNFSF13B	rs10508198	**0.0004**
GULP1	rs13034731	TRIAD3	rs10257204	0.0063
GULP1	rs1354905	UBE2K	rs4263408	0.0067
GULP1	rs13034731	WDR19	rs12648082	0.0048
GULP1	rs12624002	WDR19	rs9998591	0.0015
GULP1	rs7586390	WDR19	rs9998591	0.0063
HTT	rs2285086	TLR1	rs4833095	0.0096
HTT	rs2269478	TRIAD3	rs6967635	0.0044
HTT	rs762855	TRIAD3	rs6967635	0.0043

Gene 1	SNP 1	Gene 2	SNP 2	p-value
HTT	rs2269478	TRIAD3	rs6971918	0.0045
HTT	rs363092	TRIAD3	rs852394	0.01
HTT	rs6855981	TRIAD3	rs852394	0.01
HTT	rs10015979	TRIAD3	rs852417	0.0021
HTT	rs362331	TRIAD3	rs852417	0.003
HTT	rs362336	UBE2K	rs302947	0.001
HTT	rs2285086	WDR19	rs3733280	0.0043
ING1	rs1441043	NFATC1/NFAT2	rs8090692	0.0073
EMP	rs12647145	HTT	rs362336	0.0043
EMP	rs1316393	HTT	rs6855981	0.0081
EMP	rs1680073	EMP	rs11727167	0.0091
EMP	rs1680073	EMP	rs7664474	0.0067
EMP	rs7664474	NFATC1/NFAT2	rs183374	0.0032
EMP	rs1316393	NFATC1/NFAT2	rs2036892	0.0049
EMP	rs12641735	NFATC1/NFAT2	rs3894049	0.0015
EMP	rs7673398	TLR10	rs11096955	0.0032
EMP	rs11727167	TLR10	rs11096957	0.0063
EMP	rs12642410	TLR10	rs11096957	0.0022
EMP	rs1316393	TLR10	rs11096957	0.0026
EMP	rs7664474	TLR10	rs11096957	0.007
EMP	rs7673398	TLR10	rs11096957	0.005
EMP	rs12641735	TNFRSF11A	rs8089829	0.0043
EMP	rs12642410	TRIAD3	rs13246406	0.0042
EMP	rs7664474	TRIAD3	rs852417	0.0054
EMP	rs1680073	UBE2K	rs10440307	0.0013
EMP	rs12641735	WDR19	rs11096987	0.0037
EMP	rs12641735	WDR19	rs9998591	0.0031
NFATC1/NFAT2	rs8090692	NFATC1/NFAT2	rs177820	0.0062
NFATC1/NFAT2	rs2036892	NFATC1/NFAT2	rs7227107	0.0095
RBAK	rs7805748	TNFSF13B	rs9520835	0.0099
RNF7	rs6769676	ATR	rs13085998	**0.0004**
RNF7	rs6769676	ATR	rs4273389	**0.0001**
RNF7	rs6769676	ATR	rs7651071	<.0001
RNF7	rs6769676	TLR10	rs11096955	0.0068
RNF7	rs1980191	TLR10	rs11096957	**0.0008**
RNF7	rs6769676	TNIP2	rs4690055	0.0042
RNF7	rs6769676	WDR19	rs3733280	0.0049
SOCS6	rs713130	NFATC1/NFAT2	rs7227107	0.0066
SPSB4	rs1108693	HTT	rs2285086	0.0098
SPSB4	rs1108693	TNFSF13B	rs10508198	0.0079
STAT1	rs6751855	NFATC1/NFAT2	rs370989	0.0093
STAT1	rs6751855	NFATC1/NFAT2	rs3894049	0.0018
STAT1	rs2280233	TFDP1	rs4150703	0.0045
STAT1	rs12468579	TLR10	rs11096957	0.0049
STAT1	rs7562024	TNFRSF11A	rs4941125	0.0094
STAT1	rs12468579	TRIAD3	rs13246406	0.0027
STAT4	rs1517352	CARD11/CARMA1	rs1713911	0.003

Gene 1	SNP 1	Gene 2	SNP 2	p-value
STAT4	rs4341967	NFATC1/NFAT2	rs177820	0.0082
STAT4	rs897200	NFATC1/NFAT2	rs4799055	0.0028
STAT4	rs1517352	TLR10	rs11096955	0.0022
STAT4	rs1517352	TLR10	rs11096957	**0.0001**
STAT4	rs4341967	TLR10	rs7658893	0.006
STAT4	rs11693480	TNFRSF11A	rs7236060	0.0064
STAT4	rs12463658	UBE2K	rs302947	0.001
SUMO1	rs3754931	EMP	rs1680073	0.0018
SUMO1	rs6755690	NFATC1/NFAT2	rs177820	0.0057
SUMO1	rs6755690	TLR1	rs5743565	0.0086
TFDP1	rs12428926	TNFRSF11A	rs4263037	0.0076
TFDP2	rs2163294	HTT	rs6855981	0.0046
TFDP2	rs2163294	ING1	rs4773240	0.0099
TFDP2	rs7642874	EMP	rs12641735	0.0026
TFDP2	rs7642874	NFATC1/NFAT2	rs1667673	0.0036
TFDP2	rs9877536	NFATC1/NFAT2	rs4799055	0.0043
TFDP2	rs7642874	TNFSF13B	rs9514828	0.0077
TFDP2	rs2163294	TNFSF13B	rs9520835	0.0035
TFDP2	rs9877536	TRIAD3	rs2302907	0.0075
TLR1	rs4833095	CARD11/CARMA1	rs10236776	0.0081
TLR1	rs5743565	NFATC1/NFAT2	rs4799055	0.0016
TLR1	rs5743565	SOCS6	rs713130	0.0016
TLR1	rs4833095	TNFRSF11A	rs7239261	0.0044
TLR1	rs4833095	TRIAD3	rs10257204	0.0043
TLR1	rs4833095	TRIAD3	rs2302907	0.0027
TLR1	rs5743565	TRIAD3	rs2302907	0.0028
TLR10	rs10776482	CARD11/CARMA1	rs12538346	0.0037
TLR10	rs10776482	NFATC1/NFAT2	rs12608349	0.0036
TLR10	rs11096955	SOCS6	rs713130	0.0084
TLR10	rs7658893	SOCS6	rs713130	0.003
TLR10	rs11096957	TLR6	rs5743818	0.0027
TLR10	rs11096957	TNFRSF11A	rs12959396	0.0039
TLR10	rs11096957	TNFRSF11A	rs8094884	0.0062
TLR10	rs11096957	TRIAD3	rs2112006	0.0099
TLR10	rs7658893	UBE2K	rs4263408	0.0043
TLR6	rs5743818	CARD11/CARMA1	rs7805748	0.0087
TLR6	rs3821985	NFATC1/NFAT2	rs9962479	0.0019
TLR6	rs5743818	TFDP1	rs12428926	0.0049
TLR6	rs5743810	TRIAD3	rs852417	0.0049
TLR6	rs3821985	UBE2K	rs13122400	0.0081
TNFRSF11A	rs2981007	NFATC1/NFAT2	rs183374	0.0082
TNFSF13B	rs1224163	TNFRSF11A	rs2981007	0.0083
TRIAD3	rs852394	ING1	rs4773240	0.0016
TRIAD3	rs852374	NFATC1/NFAT2	rs177820	0.01
TRIAD3	rs13239194	TNFRSF11A	rs2957125	0.0081
TRIAD3	rs13239194	TNFSF13B	rs10508198	0.0082
TRIAD3	rs13239194	TRIAD3	rs10257204	0.0052

Gene 1	SNP 1	Gene 2	SNP 2	p-value
TRIAD3	rs852417	TRIAD3	rs2302907	0.001
TRIAD3	rs852417	TRIAD3	rs852394	0.0036
UBE2K	rs4263408	TFDP1	rs4150703	0.0049
UBE2K	rs302947	UBE2K	rs4263408	0.0091
WDR19	rs9997015	NFATC1/NFAT2	rs1667673	0.0083
WDR19	rs1057807	NFATC1/NFAT2	rs7227107	0.0069
WDR19	rs9997015	RBAK	rs7805748	0.0092
WDR19	rs9997015	TNFRSF11A	rs4263037	0.0074
WDR19	rs12648082	TNFSF13B	rs1224163	0.0085
WDR19	rs9997015	TNFSF13B	rs9514828	0.0021
WDR19	rs12648082	TRIAD3	rs2112006	0.0061
WDR19	rs1057807	UBE2K	rs302947	**0.0008**
ZAK	rs12618933	ATF2/CREB2	rs10930693	0.0019
ZAK	rs1837470	CERKL	rs1047307	0.0064
ZAK	rs13032010	CREB1	rs10932201	**0.0007**
ZAK	rs3769192	GULP1	rs10931359	0.0014
ZAK	rs17302977	GULP1	rs1354905	0.009
ZAK	rs12618933	HTT	rs362336	0.0093
ZAK	rs4972533	NFATC1/NFAT2	rs12608349	0.0012
ZAK	rs13032010	NFATC1/NFAT2	rs177820	0.0065
ZAK	rs12618933	NFATC1/NFAT2	rs7227107	0.0098
ZAK	rs989531	RBAK	rs7805748	0.0069
ZAK	rs11686011	RNF7	rs6769676	0.0075
ZAK	rs12618933	STAT4	rs11685878	0.0071
ZAK	rs4972533	STAT4	rs2356350	0.0035
ZAK	rs6759787	SUMO1	rs6717044	0.0025
ZAK	rs13032010	TLR10	rs7658893	0.0098
ZAK	rs12618933	TLR6	rs5743818	0.0065
ZAK	rs6759787	TNFRSF11A	rs7239261	0.0042
ZAK	rs12618933	UBE2K	rs4263408	0.0031

Table B5. Gene-gene interactions of clubfoot deletion region apoptotic genes p<0.01 in Hispanics.

Gene 1	SNP 1	Gene 2	SNP 2	p-value
ATF2/CREB2	rs212352	HTT	rs6446723	0.0089
ATF2/CREB2	rs2698545	NFATC1/NFAT2	rs8097537	0.0072
ATR	rs13085998	CARD11/CARMA1	rs1713911	0.0011
ATR	rs13085998	ING1	rs6492308	0.0095
ATR	rs13085998	TNFRSF11A	rs7236060	0.0053
ATR	rs3922730	TNIP2	rs4690055	0.0028
ATR	rs4273389	NFATC1/NFAT2	rs1660139	0.0079
ATR	rs6440085	NFATC1/NFAT2	rs4799055	0.0077
ATR	rs7651071	CARD11/CARMA1	rs1713911	0.0065
ATR	rs7651071	WDR19	rs11096987	0.0013
ATR	rs9816736	WDR19	rs11096987	0.0033
CARD11/CARMA1	rs10236776	TNFRSF11A	rs2981007	0.009
CARD11/CARMA1	rs10236776	TRIAD3	rs2302907	0.0097
CARD11/CARMA1	rs11982651	ING1	rs1441043	0.0057
CARD11/CARMA1	rs1713911	ING1	rs1441043	<.0001
CARD11/CARMA1	rs1713911	TNFRSF11A	rs8089829	0.0021
CARD11/CARMA1	rs4722276	TNFRSF11A	rs8094884	0.0047
CARD11/CARMA1	rs4722276	TRIAD3	rs3779092	0.0071
CARD11/CARMA1	rs4722356	TNFSF13B	rs10508198	0.0076
CERKL	rs10445770	TNIP2	rs4690060	0.002
CERKL	rs10445770	TRIAD3	rs3823681	0.0043
CERKL	rs10445770	UBE2K	rs12644528	0.0099
CERKL	rs1047307	CARD11/CARMA1	rs11982651	0.0018
CERKL	rs1047307	GULP1	rs7593546	0.0087
CERKL	rs1047307	NFATC1/NFAT2	rs177820	**0.0009**
CERKL	rs11680383	TRIAD3	rs13247447	0.0088
CERKL	rs1866888	HTT	rs362331	**0.0007**
CERKL	rs1992394	NFATC1/NFAT2	rs177820	0.0062
CERKL	rs1992394	SUMO1	rs3754931	0.0044
CERKL	rs1992394	TLR10	rs10776482	0.0073
CERKL	rs1992394	TNFRSF11A	rs2981007	0.0044
CERKL	rs1992394	TNFSF13B	rs9520835	0.01
CERKL	rs895901	HTT	rs6446723	0.0066
CERKL	rs895901	TLR10	rs11096957	0.0025
CERKL	rs895901	TRIAD3	rs13247447	0.0065
CERKL	rs935087	GULP1	rs12474692	0.0021
CERKL	rs935087	TLR1	rs4833095	0.0034
CERKL	rs935087	TRIAD3	rs6971918	0.0075
CREB1	rs10932201	HTT	rs10015979	0.01
CREB1	rs2253206	TRIAD3	rs10257204	0.0098
GULP1	rs10931346	NFATC1/NFAT2	rs7227107	0.0059
GULP1	rs10931346	RBAK	rs10238244	0.0014
GULP1	rs10931359	ATR	rs9816736	0.0076
GULP1	rs11685321	STAT1	rs13395505	0.0042

Gene 1	SNP 1	Gene 2	SNP 2	p-value
GULP1	rs12474692	ATR	rs13085998	0.007
GULP1	rs12474692	RBAK	rs7778444	**0.0003**
GULP1	rs12474692	SOCS6	rs7230661	0.0015
GULP1	rs13034731	ATR	rs6440085	0.0058
GULP1	rs13034731	WDR19	rs12648082	0.0066
GULP1	rs13034731	WDR19	rs1451821	0.0054
GULP1	rs13034731	WDR19	rs3733280	0.0025
GULP1	rs4396679	CREB1	rs10932201	0.0042
GULP1	rs4396679	RBAK	rs10238244	0.0051
GULP1	rs6724428	RBAK	rs7778444	0.0066
GULP1	rs7586390	ATR	rs13085998	0.01
GULP1	rs7586390	RBAK	rs7778444	**0.0006**
HTT	rs10015979	HTT	rs2269478	0.0069
HTT	rs10015979	NFATC1/NFAT2	rs2036892	0.0083
HTT	rs10015979	WDR19	rs12648082	0.0045
HTT	rs362331	CARD11/CARMA1	rs4722356	0.0056
HTT	rs362336	NFATC1/NFAT2	rs1667673	0.007
HTT	rs362336	NFATC1/NFAT2	rs4799055	0.0014
HTT	rs362336	TNFRSF11A	rs2981007	0.0045
HTT	rs362336	TNFRSF11A	rs8089829	0.005
HTT	rs362336	TNFSF13B	rs8181791	0.005
HTT	rs362336	TNFSF13B	rs9514828	0.0057
HTT	rs363092	NFATC1/NFAT2	rs7227107	0.0065
HTT	rs363092	TRIAD3	rs13247447	0.007
HTT	rs4690074	TLR10	rs11096957	0.0054
HTT	rs762855	NFATC1/NFAT2	rs177820	0.0011
ING1	rs4773240	NFATC1/NFAT2	rs7227107	0.0056
EMP	rs11727167	HTT	rs363092	0.008
EMP	rs12641735	SOCS6	rs713130	0.0095
EMP	rs12647145	NFATC1/NFAT2	rs3894049	0.0056
EMP	rs1680073	TLR10	rs7658893	0.0054
RBAK	rs7778444	TFDP1	rs4150703	0.0065
RBAK	rs7778444	TNFRSF11A	rs4263037	0.0028
RBAK	rs7778444	TNFRSF11A	rs7236060	0.0018
RBAK	rs7778444	TNFRSF11A	rs8089829	**0.0009**
RBAK	rs7778444	TNFSF13B	rs9514828	**0.0008**
RBAK	rs7805748	NFATC1/NFAT2	rs177820	0.0082
RBAK	rs7805748	TFDP1	rs7325214	0.002
RBAK	rs7805748	TFDP1	rs9577595	0.003
RNF7	rs1980191	HTT	rs363092	0.0011
RNF7	rs6769676	UBE2K	rs305827	0.0036
RNF7	rs6776205	CARD11/CARMA1	rs11982651	0.0028
RNF7	rs6776205	EMP	rs7664474	0.0029
RNF7	rs6776205	TNFRSF11A	rs12959396	0.0018
RNF7	rs6776205	TRIAD3	rs13247447	**0.0005**
RNF7	rs6776205	TRIAD3	rs852374	0.0043
SOC6	rs2053420	NFATC1/NFAT2	rs1667673	0.0016

Gene 1	SNP 1	Gene 2	SNP 2	p-value
STAT1	rs12468579	STAT4	rs925847	**0.0008**
STAT1	rs13395505	CARD11/CARMA1	rs4722276	0.0031
STAT1	rs13395505	TNFRSF11A	rs8089829	0.0087
STAT1	rs2280233	EMP	rs12641735	0.0017
STAT1	rs2280233	EMP	rs12647145	0.0095
STAT1	rs2280233	UBE2K	rs302947	0.0081
STAT1	rs6751855	TRIAD3	rs1468996	0.0062
STAT1	rs7562024	HTT	rs363092	0.0096
STAT1	rs7562024	TNFRSF11A	rs2981007	0.0055
STAT4	rs11685878	CARD11/CARMA1	rs4722356	0.01
STAT4	rs1517352	SOCS6	rs7230661	0.0056
STAT4	rs16833215	HTT	rs363096	0.0031
STAT4	rs16833215	SUMO1	rs3754931	0.0049
STAT4	rs16833215	TNIP2	rs9683949	0.0095
STAT4	rs16833215	TRIAD3	rs11771172	0.0018
STAT4	rs16833215	TRIAD3	rs13246406	0.001
STAT4	rs16833249	RNF7	rs6776205	0.0095
STAT4	rs4853543	NFATC1/NFAT2	rs12608349	0.0024
STAT4	rs4853543	STAT4	rs6738544	0.0089
STAT4	rs6738544	ATR	rs13085998	0.0066
STAT4	rs6738544	TRIAD3	rs13246406	0.005
STAT4	rs7572482	CARD11/CARMA1	rs10236776	0.0039
STAT4	rs7572482	UBE2K	rs3912392	0.002
STAT4	rs7574909	NFATC1/NFAT2	rs8090692	0.0033
STAT4	rs7574909	RNF7	rs6769676	0.0035
STAT4	rs925847	EMP	rs11727167	0.0052
STAT4	rs925847	EMP	rs12642410	0.0012
STAT4	rs925847	EMP	rs1316393	0.0057
STAT4	rs925847	EMP	rs7673398	0.0035
STAT4	rs925847	RNF7	rs1980191	0.0014
STAT4	rs925847	STAT4	rs1517352	0.0032
STAT4	rs925847	STAT4	rs4853543	0.0034
STAT4	rs925847	TNFRSF11A	rs12959396	0.0091
STAT4	rs925847	TNFRSF11A	rs8094884	**0.0003**
STAT4	rs925847	UBE2K	rs13122400	0.0035
SUMO1	rs4675272	SUMO1	rs3754931	0.0012
SUMO1	rs4675272	TNFSF13B	rs9520835	**0.0002**
SUMO1	rs4675272	TRIAD3	rs11771172	0.0012
SUMO1	rs6717044	HTT	rs2285086	0.0055
SUMO1	rs6717044	RBAK	rs7778444	0.0012
TFDP1	rs7325214	NFATC1/NFAT2	rs7227107	**0.0007**
TFDP1	rs7325214	TNFRSF11A	rs4263037	0.0051
TFDP1	rs7325214	TNFRSF11A	rs8089829	0.0028
TFDP1	rs9577595	NFATC1/NFAT2	rs4799055	0.0097
TFDP1	rs9577595	NFATC1/NFAT2	rs7227107	0.0027
TFDP1	rs9577595	TNFRSF11A	rs8089829	0.0077
TLR1	rs4833095	TNFSF13B	rs1224163	0.0052

Gene 1	SNP 1	Gene 2	SNP 2	p-value
TLR1	rs4833095	TRIAD3	rs10257204	0.005
TLR10	rs10776482	CARD11/CARMA1	rs10236776	0.0049
TLR10	rs11096955	CARD11/CARMA1	rs10236776	0.0055
TLR6	rs5743818	UBE2K	rs10440307	0.0078
TNFRSF11A	rs4263037	TNFRSF11A	rs8089829	0.002
TNFRSF11A	rs7236060	NFATC1/NFAT2	rs177820	0.0051
TNFRSF11A	rs9646629	NFATC1/NFAT2	rs4799055	0.0086
TNFSF13B	rs9514828	NFATC1/NFAT2	rs2290154	0.009
TNFSF13B	rs9520835	TNFRSF11A	rs4941125	0.0069
TNIP2	rs4690060	NFATC1/NFAT2	rs8090692	0.0058
TNIP2	rs4690060	TRIAD3	rs2017620	0.0019
TNIP2	rs4690060	TRIAD3	rs6971918	0.0063
TNIP2	rs9683949	TRIAD3	rs13246406	0.0053
TRIAD3	rs2017620	TNFRSF11A	rs7239261	0.0061
TRIAD3	rs3779092	NFATC1/NFAT2	rs8090692	0.0029
TRIAD3	rs3823681	TNFRSF11A	rs7239261	0.0057
TRIAD3	rs6967635	TNFRSF11A	rs7239261	0.0062
TRIAD3	rs6971918	TNFRSF11A	rs7239261	0.0018
TRL6	rs3821985	UBE2K	rs305827	**0.0005**
UBE2K	rs12644528	TRIAD3	rs2017620	0.0046
UBE2K	rs305827	NFATC1/NFAT2	rs8090692	0.0047
UBE2K	rs305827	TRIAD3	rs6967635	0.0066
UBE2K	rs305827	TRIAD3	rs6971918	0.0055
UBE2K	rs3912392	CARD11/CARMA1	rs11982651	0.0069
UBE2K	rs3912392	NFATC1/NFAT2	rs8090692	0.0052
WDR19	rs12648082	CARD11/CARMA1	rs1713911	0.0033
WDR19	rs1451821	CARD11/CARMA1	rs1713911	0.0065
WDR19	rs3733280	RBAK	rs7805748	0.0082
WDR19	rs3733280	TNFRSF11A	rs2981007	0.0032
WDR19	rs6815686	WDR19	rs3733280	0.0072
ZAK	rs11685001	CERKL	rs10445770	0.0029
ZAK	rs11685001	CREB1	rs2254137	0.0098
ZAK	rs11685001	TRIAD3	rs3779092	0.0057
ZAK	rs11686011	CERKL	rs10445770	0.006
ZAK	rs11686011	STAT4	rs4341967	**0.0006**
ZAK	rs13032010	CARD11/CARMA1	rs10236776	0.0063
ZAK	rs13032010	CERKL	rs10445770	0.0061
ZAK	rs13032010	SOCS6	rs7230661	0.0052
ZAK	rs1837470	RNF7	rs6769676	0.005
ZAK	rs2028382	CERKL	rs10445770	0.0023
ZAK	rs2028382	TFDP1	rs9577595	0.0019
ZAK	rs3769192	CERKL	rs10445770	0.0088
ZAK	rs4972533	CERKL	rs10445770	0.0013
ZAK	rs4972533	TRIAD3	rs3779092	**0.0003**
ZAK	rs4972533	TRL6	rs3821985	0.0096
ZAK	rs6433395	STAT4	rs16833249	0.0078
ZAK	rs6433395	TNFRSF11A	rs7239261	0.0097

Gene 1	SNP 1	Gene 2	SNP 2	p-value
ZAK	rs6759787	NFATC1/NFAT2	rs177820	0.0098
ZAK	rs989531	HTT	rs362336	0.0024
ZAK	rs989531	UBE2K	rs3912392	0.0097

Appendix C: HOXA and HOXD Supplemental Tables

Supplemental Table I. Linkage disequilibrium (D') for *HOXD* (A) and *HOXA* (B) for nonHispanic white population[a,b]

A.

		rs6749771	rs1446575	rs1318778	rs1542180	rs1867863	rs2113563	rs2592394	rs847146	rs741610	rs711812	rs6758117
		SNP1	SNP2	SNP3	SNP4	SNP5	SNP6	SNP7	SNP8	SNP9	SNP10	SNP11
rs6749771	SNP1		0.789	0.613	0.795	0.715	0.39	0.401	0.094	0.273	0.193	0.2
rs1446575	SNP2	0.712		0.973	0.99	0.899	0.483	0.484	0.163	0.32	0.286	0.332
rs1318778	SNP3	0.384	0.935		1	0.845	0.514	0.45	0.236	0.582	0.492	0.013
rs1542180	SNP4	0.708	0.986	1		0.902	0.513	0.52	0.169	0.334	0.255	0.35
rs1867863	SNP5	0.632	0.926	0.824	0.928		0.759	0.471	0.158	0.32	0.244	0.413
rs2113563	SNP6	0.13	0.39	0.479	0.418	0.814		0.825	0.387	0.108	0.042	0.335
rs2592394	SNP7	0.22	0.522	0.499	0.572	0.679	0.856		0.008	0.488	0.305	0.295
rs847146	SNP8	0.153	0.242	0.33	0.254	0.235	0.387	0.182		0.762	0.72	0.267
rs741610	SNP9	0.226	0.316	0.608	0.324	0.242	0.02	0.314	0.74		0.988	0.425
rs711812	SNP10	0.196	0.288	0.514	0.282	0.218	0.011	0.289	0.695	0.985		0.362
rs6758117	SNP11	0.234	0.438	0.397	0.422	0.417	0.406	0.461	0.331	0.31	0.322	

[a]D' of affecteds above diagnonal; D' of normals below diagonal.

[b]D'>0.8 shown in dark orange; 0.6<D'<0.8 shown in medium orange; 0.3<D'<0.6 shown in pale yellow

B.

		rs2462907	rs6668	rs2428431	rs3757640	rs3801776	rs3779456	rs1859164	rs6968828	rs3807598
		SNP12	SNP13	SNP14	SNP15	SNP16	SNP17	SNP18	SNP19	SNP20
rs2462907	SNP12		0.773	0.749	0.156	0.016	0.257	0.207	0.068	0.126
rs6668	SNP13	0.767		0.948	0.638	0.601	0.195	0.232	0.04	0.151
rs2428431	SNP14	0.747	0.966		0.698	0.601	0.181	0.226	0.018	0.119
rs3757640	SNP15	0.07	0.697	0.701		0.56	0.055	0.545	0.318	0.324
rs3801776	SNP16	0.06	0.57	0.555	0.557		0.027	0.451	0.313	0.265
rs3779456	SNP17	0.245	0.198	0.178	0.063	0.211		0.975	0.498	0.701
rs1859164	SNP18	0.226	0.143	0.134	0.559	0.651	0.992		0.779	0.728
rs6968828	SNP19	0.155	0.074	0.045	0.353	0.476	0.515	0.733		0.941
rs3807598	SNP20	0.164	0.163	0.117	0.363	0.477	0.721	0.77	0.966	

[a]D’ of affecteds above diagnonal; D’ of normals below diagonal.
[b]D’>0.8 shown in dark orange; 0.6<D’<0.8 shown in medium orange; 0.3<D’<0.6 shown in pale yellow

Supplemental Table III. Linkage disequilibrium (D') for *HOXD* (A) and *HOXA* (B) for Hispanic population[a,b]

A.

		rs6749771	rs1446575	rs1318778	rs1542180	rs1867863	rs2113563	rs2592394	rs847146	rs741610	rs711812	rs6758117
		SNP1	SNP2	SNP3	SNP4	SNP5	SNP6	SNP7	SNP8	SNP9	SNP10	SNP11
rs6749771	SNP1		0.778	0.671	0.775	0.786	0.303	0.478	0.231	0.403	0.422	0.343
rs1446575	SNP2	0.772		1	1	0.951	0.351	0.726	0.231	0.472	0.414	0.477
rs1318778	SNP3	0.615	0.964		1	0.97	0.631	0.612	0.366	0.586	0.503	0.324
rs1542180	SNP4	0.762	0.978	1		0.951	0.348	0.725	0.228	0.469	0.41	0.484
rs1867863	SNP5	0.791	0.955	0.956	0.939		0.819	0.707	0.13	0.24	0.241	0.403
rs2113563	SNP6	0.216	0.302	0.674	0.322	0.766		0.93	0.144	0.111	0.106	0.34
rs2592394	SNP7	0.37	0.588	0.676	0.655	0.596	0.928		0.235	0.412	0.249	0.361
rs847146	SNP8	0.214	0.356	0.466	0.353	0.241	0.107	0.159		0.739	0.685	0.29
rs741610	SNP9	0.312	0.401	0.519	0.436	0.271	0.036	0.447	0.713		0.974	0.046
rs711812	SNP10	0.352	0.415	0.556	0.433	0.28	0.053	0.388	0.642	0.969		0.059
rs6758117	SNP11	0.408	0.499	0.571	0.528	0.425	0.365	0.378	0.546	0.089	0.08	

[a]D' of affecteds above diagnonal; D' of normals below diagonal.

[b]D'>0.8 shown in dark orange; 0.6<D'<0.8 shown in medium orange; 0.3<D'<0.6 shown in pale yellow

B.

		rs2462907	rs6668	rs2428431	rs3757640	rs3801776	rs3779456	rs1859164	rs6968828	rs3807598
		SNP12	SNP13	SNP14	SNP15	SNP16	SNP17	SNP18	SNP19	SNP20
rs2462907	SNP12		0.696	0.706	0.217	0.254	0.172	0.254	0.086	0.082
rs6668	SNP13	0.707		0.982	0.611	0.453	0.276	0.257	0.052	0.044
rs2428431	SNP14	0.724	0.975		0.626	0.439	0.294	0.282	0.089	0.022
rs3757640	SNP15	0.203	0.415	0.448		0.605	0.158	0.403	0.189	0.14
rs3801776	SNP16	0.406	0.574	0.6	0.672		0.506	0.715	0.187	0.676
rs3779456	SNP17	0.031	0.088	0.14	0.181	0.56		0.967	0.072	0.779
rs1859164	SNP18	0.095	0.012	0.068	0.405	0.766	0.969		0.26	0.755
rs6968828	SNP19	0.209	0.126	0.126	0.302	0.173	0.317	0.493		0.934
rs3807598	SNP20	0.032	0.158	0.137	0.148	0.632	0.812	0.731	0.971	

[a]D’ of affecteds above diagonal; D’ of normals below diagonal.

[b]D’>0.8 shown in dark orange; 0.6<D’<0.8 shown in medium orange; 0.3<D’<0.6 shown in pale yellow

Supplemental Table V. Results of APL analysis of *HOXA* haplotypes in discovery population[a,b,c]

		rs2462907	rs6668	rs2428431	rs3757640	rs3801776	rs3779456	rs1859164	rs6968828	rs3807598
SNP	Pos.	SNP12	SNP13	SNP14	SNP15	SNP16	SNP17	SNP18	SNP19	SNP20
rs2462907	SNP12		0.878	0.527	0.493	0.035	0.507	0.362	0.604	0.148
rs6668	SNP13	0.119		0.206	0.351	0.022	0.416	0.529	0.803	0.165
rs2428431	SNP14	0.051	0.065		0.350	0.020	0.672	0.510	0.597	0.264
rs3757640	SNP15	0.016	0.037	0.009		0.028	0.191	0.380	0.466	0.151
rs3801776	SNP16	0.006	0.050	0.019	0.105		0.018	0.004	0.017	0.015
rs3779456	SNP17	0.049	0.066	0.058	0.804	0.426		0.451	0.509	0.235
rs1859164	SNP18	0.029	0.017	0.035	0.675	0.255	0.405		0.848	0.364
rs6968828	SNP19	0.218	0.031	0.006	0.629	0.383	0.422	0.730		0.495
rs3807598	SNP20	0.165	0.156	0.103	0.830	0.348	0.749	0.696	0.580	

[a]Hispanic p values shown below diagonal, nonHispanic white above the diagonal.
[b]$p<0.01$ shown in red and $p<0.05$ shown in blue, respectively.
[c]p-values uncorrected for multiple testing

Supplemental Table VI. Results of APL analysis of *HOXD* haplotypes in discovery population[a,b,c]

		rs6749771	rs1446575	rs1318778	rs1542180	rs1867863	rs2113563	rs2592394	rs847146	rs741610	rs711812	rs6758117
SNP	Pos.	SNP1	SNP2	SNP3	SNP4	SNP5	SNP6	SNP7	SNP8	SNP9	SNP10	SNP11
rs6749771	SNP1		0.007	0.037	0.019	0.018	0.007	0.006	0.010	0.100	0.076	0.101
rs1446575	SNP2	0.761		0.090	0.136	0.224	0.111	0.071	0.101	0.147	0.104	0.086
rs1318778	SNP3	0.416	0.543		0.138	0.483	0.426	0.606	0.660	0.259	0.790	0.197
rs1542180	SNP4	0.699	0.068	0.643		0.256	0.214	0.182	0.151	0.375	0.201	0.267
rs1867863	SNP5	0.903	0.829	0.621	0.527		0.366	0.374	0.407	0.712	0.572	0.438
rs2113563	SNP6	0.862	0.662	0.196	0.604	0.314		0.804	0.107	0.347	0.113	0.646
rs2592394	SNP7	0.312	0.188	0.038	0.204	0.213	0.671		0.491	0.909	0.331	0.643
rs847146	SNP8	0.992	0.710	0.300	0.544	0.653	0.883	0.626		0.520	0.594	0.560
rs741610	SNP9	0.888	0.766	0.557	0.849	0.724	0.931	0.586	0.709		0.282	0.792
rs711812	SNP10	0.915	0.752	0.198	0.838	0.811	0.806	0.499	0.653	0.508		0.831
rs6758117	SNP11	0.872	0.875	0.753	0.795	0.731	0.853	0.341	0.015	0.564	0.606	

[a]Hispanic shown below diagonal, nonHispanic white above the diagonal.
[b]$p<0.01$ shown in red and $p<0.05$ shown in blue, respectively.
[c]p-values uncorrected for multiple testing

Supplemental Table IX. Results of GEE Analysis for gene-gene interactions between *HOXA* and *HOXD* and *IGFBP3* in nonHispanic whites[a,b]

Gene1	SNP1	Gene2	SNP2	p-value
HOXD	rs1446575 (SNP2)	***IGFBP3***	rs2453839 (SNP30)	0.022
	rs1318778 (SNP3)		rs3793345 (SNP26)	0.034
	rs1318778 (SNP3)		rs2471551 (SNP27)	0.019
	rs1542180 (SNP4)		rs2453839 (SNP30)	0.018
	rs1867863 (SNP5)		rs2453839 (SNP30)	0.013
	rs2113563 (SNP6)		rs3793345 (SNP26)	**0.008**
	rs2113563 (SNP6)		rs2471551 (SNP27)	**0.007**
	rs2592394 (SNP7)		rs2132571 (SNP21)	0.024
	rs2592394 (SNP7)		rs2854744 (SNP23)	0.047
	rs2592394 (SNP7)		rs2854746 (SNP24)	0.012
	rs2592394 (SNP7)		rs3793345 (SNP26)	**0.003**
	rs2592394 (SNP7)		rs2471551 (SNP27)	**0.001**
	rs2592394 (SNP7)		rs3110697 (SNP28)	0.044
HOXA	rs3757640 (SNP15)		rs13223993 (SNP32)	0.010
	rs3801776 (SNP16)		rs2132572 (SNP22)	0.025
	rs3801776 (SNP16)		rs13223993 (SNP32)	**<0.001**
	rs1859164 (SNP18)		rs2854744 (SNP23)	0.027
	rs6968828 (SNP19)		rs2854744 (SNP23)	0.019
	rs6968828 (SNP19)		rs2854747 (SNP25)	**0.003**
	rs6968828 (SNP19)		rs3110697 (SNP28)	**0.001**
	rs3807598 (SNP20)		rs2854747 (SNP25)	0.033
	rs3807598 (SNP20)		rs3110697 (SNP28)	0.011

[a]p<0.05 shown and p<0.01 in bold
[b]p-values uncorrected for multiple testing

Supplemental Table X. Results of GEE Analysis for gene-gene interactions between *HOXA* and *HOXD* and *IGFBP3* in Hispanic population[a,b]

Gene1	SNP1	Gene2	SNP2	p-value
HOXD	rs1318778 (SNP3)	***IGFBP3***	rs13223993 (SNP32)	0.015
	rs847146 (SNP8)		rs13223993 (SNP32)	0.022
	rs741610 (SNP9)		rs13223993 (SNP32)	**0.002**
	rs711812 (SNP10)		rs13223993 (SNP32)	**0.003**
	rs6758117 (SNP11)		rs6670 (SNP31)	0.025
HOXA	rs3801776 (SNP16)		rs2132571 (SNP21)	0.018
	rs3779456 (SNP17)		rs2132571 (SNP21)	0.032
	rs1859164 (SNP18)		rs2132571 (SNP21)	0.033

[a]$p<0.05$ shown, $p<0.01$ in bold
[b]p-values uncorrected for multiple testing

Supplemental Table XI. Results of GEE analysis for gene-gene interactions between *HOXA* and *HOXD* and *IGFBP3* in validation population[a,b]

Gene 1	SNP1	Gene2	SNP2	p-value
HOXD	rs6749771 (SNP1)	***IGFBP3***	rs3110697 (SNP28)	0.016
	rs1542180 (SNP4)		rs2132572 (SNP22)	0.035
	rs1542180 (SNP4)		rs2854747 (SNP25)	**0.002**
	rs1542180 (SNP4)		rs3793345 (SNP26)	0.035
	rs1542180 (SNP4)		rs2471551 (SNP27)	0.044
	rs1542180 (SNP4)		rs3110697 (SNP28)	**0.0003**
	rs1542180 (SNP4)		rs2453839 (SNP30)	**0.002**
	rs1867863 (SNP5)		rs2854747 (SNP25)	0.031
	rs1867863 (SNP5)		rs2453839 (SNP30)	0.011
	rs2592394 (SNP7)		rs2132572 (SNP22)	0.033
	rs2592394 (SNP7)		rs2854744 (SNP23)	0.037
	rs2592394 (SNP7)		rs2854747 (SNP25)	**0.0006**
	rs2592394 (SNP7)		rs3793345 (SNP26)	0.021
	rs2592394 (SNP7)		rs2471551 (SNP27)	0.026
	rs2592394 (SNP7)		rs3110697 (SNP28)	**<0.0001**
	rs2592394 (SNP7)		rs2453839 (SNP30)	**0.004**
	rs847146 (SNP8)		rs2132572 (SNP22)	0.034
	rs847146 (SNP8)		rs2854747 (SNP25)	**0.004**
	rs847146 (SNP8)		rs3793345 (SNP26)	0.038
	rs847146 (SNP8)		rs2471551 (SNP27)	0.044
	rs847146 (SNP8)		rs3110697 (SNP28)	**0.001**
	rs2462907 (SNP12)		rs3793345 (SNP26)	0.016
HOXA	rs2462907 (SNP12)		rs2471551 (SNP27)	**0.007**
	rs6968828 (SNP19)		rs6670 (SNP31)	0.016

[a]p<0.05 shown and p<0.01 in bold
[b]p-values uncorrected for multiple testing

Supplemental Table XII. Results of GEE Analysis for gene-gene interactions for *HOX*, *IGFBP3* and mitochondrial mediated apoptotic variants in nonHispanic white population[a,b]

Gene1	SNP1	Gene2	SNP2	p-value
Apaf1	rs2288729	***HOXD***	rs711812 (SNP10)	0.047
Bid	rs3788284		rs2113563 (SNP6)	0.045
Bid	rs181405		rs847146 (SNP8)	0.026
Bid	rs8919		rs6758117 (SNP11)	**0.007**
Bcl2	rs1801018		rs6749771 (SNP1)	0.049
Bcl2	rs1809319		rs1867863 (SNP5)	0.025
Bcl2	rs1801018		rs1867863 (SNP5)	0.029
Casp3	rs1049216		rs6749771 (SNP1)	**0.002**
Casp3	rs1405937		rs6749771 (SNP1)	**0.005**
Casp3	rs1405944		rs6749771 (SNP1)	0.011
Casp3	rs2720378		rs6749771 (SNP1)	0.014
Casp3	rs4647602		rs6749771 (SNP1)	0.016
Casp3	rs2696057		rs6749771 (SNP1)	0.037
Casp3	rs1049253		rs1446575 (SNP2)	0.031
Casp3	rs1049253		rs1542180 (SNP4)	0.049
Casp3	rs1049216		rs1867863 (SNP5)	0.023
Casp3	rs1049216		rs2113563 (SNP6)	0.018
Casp3	rs1049253		rs2592394 (SNP7)	**0.001**
Casp3	rs1049216		rs2592394 (SNP7)	**0.008**
Casp3	rs1405944		rs741610 (SNP9)	0.043
Casp3	rs1049253		rs6758117 (SNP11)	0.035
Casp3	rs2720378		rs6758117 (SNP11)	0.040
Casp9	rs4233533		rs741610 (SNP9)	0.017
Casp9	rs2042370		rs741610 (SNP9)	0.044
Casp10	rs3900115		rs6749771 (SNP1)	0.044
Apaf1	rs7310804	***HOXA***	rs3779456 (SNP17)	0.042
Apaf1	rs7310804		rs1859164 (SNP18)	0.043
Bid	rs3788284		rs2462907 (SNP12)	0.029
Bid	rs5747351		rs2428431 (SNP14)	0.029
Bid	rs8190315		rs3757640 (SNP15)	0.023
Bid	rs8919		rs3801776 (SNP16)	0.016
Bid	rs8919		rs1859164 (SNP18)	0.036
Bid	rs181405		rs3779456 (SNP17)	**0.001**
Bid	rs181405		rs1859164 (SNP18)	**0.005**
Casp3	rs1049216		rs6668 (SNP13)	0.014

Casp3	rs1405944		rs6668 (SNP13)	0.010
Casp3	rs2720378		rs6668 (SNP13)	**0.004**
Casp3	rs2720378		rs2428431 (SNP14)	0.039
Casp3	rs1405937		rs3801776 (SNP16)	0.048
Casp3	rs2720378		rs3779456 (SNP17)	0.033
Casp3	rs1049216		rs1859164 (SNP18)	**0.004**
Casp3	rs2720378		rs1859164 (SNP18)	**0.004**
Casp3	rs1405944		rs1859164 (SNP18)	0.022
Casp3	rs2696057		rs1859164 (SNP18)	0.014
Casp3	rs4647602		rs1859164 (SNP18)	0.017
Casp3	rs1405937		rs1859164 (SNP18)	0.029
Casp3	rs1049216		rs6968828 (SNP19)	0.026
Casp3	rs2696057		rs6968828 (SNP19)	0.041
Casp3	rs1049216		rs3807598 (SNP20)	0.010
Casp3	rs1405944		rs3807598 (SNP20)	0.025
Casp3	rs2696057		rs3807598 (SNP20)	0.026
Casp9	rs1052571		rs3757640 (SNP15)	0.024
Casp9	rs2308941		rs6968828 (SNP19)	0.042
Casp10	rs3900115		rs3779456 (SNP17)	**0.008**

[a]$p<0.05$ shown and $p<0.01$ in bold
[b]p-values uncorrected for multiple testing

Supplemental Table XIII. Results of GEE Analysis for gene-gene interactions of *HOX*, *IGFBP3* and mitochondrial mediated apoptotic variants in Hispanic population[a,b]

Gene 1	SNP 1	Gene 2	SNP 2	p-value
Bcl2	rs2551402	***HOXD***	rs6749771 (SNP1)	0.045
Bcl2	rs1809319		rs1446575 (SNP2)	0.038
Bcl2	rs1809319		rs847146 (SNP8)	0.015
Bcl2	rs1809319		rs711812 (SNP10)	0.016
Bcl2	rs1809319		rs6758117 (SNP11)	0.012
Bcl2	rs1801018		rs6758117 (SNP11)	0.037
Bid	rs5747351		rs6749771 (SNP1)	0.015
Bid	rs3788284		rs6749771 (SNP1)	0.010
Bid	rs181410		rs1318778 (SNP3)	0.034
Bid	rs181399		rs1318778 (SNP3)	0.030
Bid	rs5747351		rs1867863 (SNP5)	0.027
Bid	rs181410		rs2113563 (SNP6)	0.045
Bid	rs3788284		rs2113563 (SNP6)	0.032
Bid	rs181399		rs2592394 (SNP7)	0.024
Bid	rs3788284		rs2592394 (SNP7)	0.018
Casp3	rs4647602		rs1318778 (SNP3)	**<0.001**
Casp3	rs4647602		rs2113563 (SNP6)	**0.009**
Casp3	rs2696057		rs2592394 (SNP7)	0.041
Casp3	rs4647602		rs2592394 (SNP7)	0.015
Casp3	rs2696057		rs741610 (SNP9)	**0.008**
Casp3	rs2696057		rs711812 (SNP10)	0.040
Casp9	rs4233533		rs2428431 (SNP14)	0.043
Apaf1	rs1866477	***HOXA***	rs3757640 (SNP15)	0.047
Apaf1	rs2278361		rs1859164 (SNP18)	0.043
Apaf1	rs7310804		rs6968828 (SNP19)	0.038
Apaf1	rs3782558		rs6968828 (SNP19)	0.010
Apaf1	rs1866477		rs6968828 (SNP19)	**0.009**
Apaf1	rs7968661		rs3807598 (SNP20)	0.023

[a]$p<0.05$ shown and $p<0.01$ in bold
[b]p-values uncorrected for multiple testing